elobau GmbH & Co. KG
Zeppelinstr. 44
88299 Leutkirch, Germany

Tel.: +49 (0) 7561 970-0
Fax: +49 (0) 7561 970-100

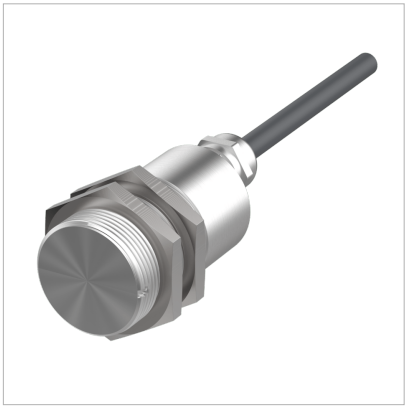

Sensor de segurança 671 à prova de explosão com certificação ATEX - 2014/34/EU

Os sensores de segurança 671 com certificação ATEX são ideais para aplicação em áreas com elevado risco de explosão devido à gases ou poeira. Os sensores 671 foram desenvolvidos para que não ocorra nenhuma faísca durante sua aplicação e tampouco elevação da temperatura de trabalho. A carcaça do sensor oferece um terminal de aterramento, permitindo que o sensor seja aterrado proporcionando um nível adicional de segurança para este tipo de aplicação.

Frequentemente utilizado no monitoramento de proteções móveis em moinhos usados □□a produção de alimentos e produtos farmacêuticos, e também em plantas de processamento de petróleo e gás (por exemplo, linhas de pintura).

Especificação Técnica

- Classe de proteção IP68 (até 10 bar) ideal para aplicações em indústria de processo
- Atuadores adequados 30420000V, 30420000VS, 30420000VH, 30420000SH
- Versões intrinsecamente seguras para 1G/1D (Zona 0 / 20)
- Variantes em versão não-intrinsecamente segura para 2G/2D (Zona 1 / 21)

Desenho técnico

IMAGE 1/2

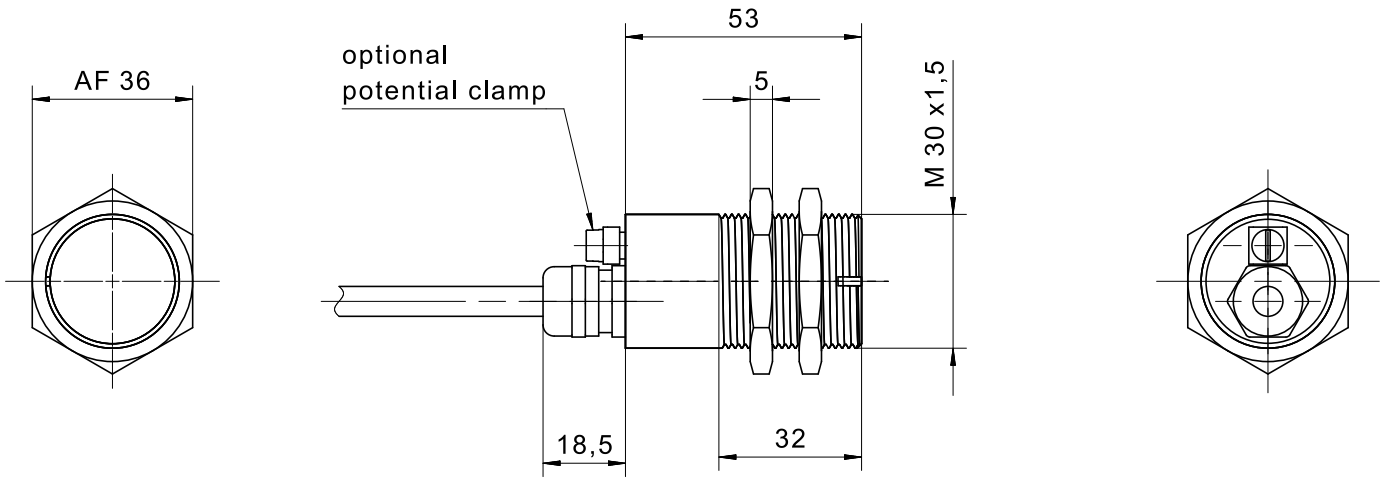

elobau GmbH & Co. KG
Zeppelinstr. 44
88299 Leutkirch, Germany

Tel.: +49 (0) 7561 970-0
Fax: +49 (0) 7561 970-100

IMAGE 2/2

671V62..0
671V62..012

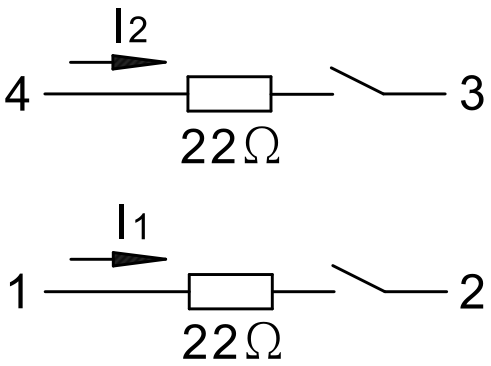

671271..0
671271..012

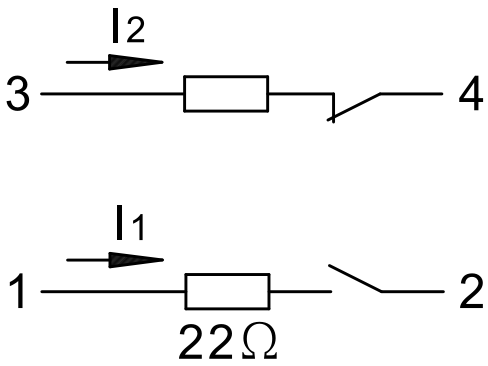

elobau GmbH & Co. KG
Zeppelinstr. 44
88299 Leutkirch, Germany

Tel.: +49 (0) 7561 970-0
Fax: +49 (0) 7561 970-100

Product options

IMAGE 1/3

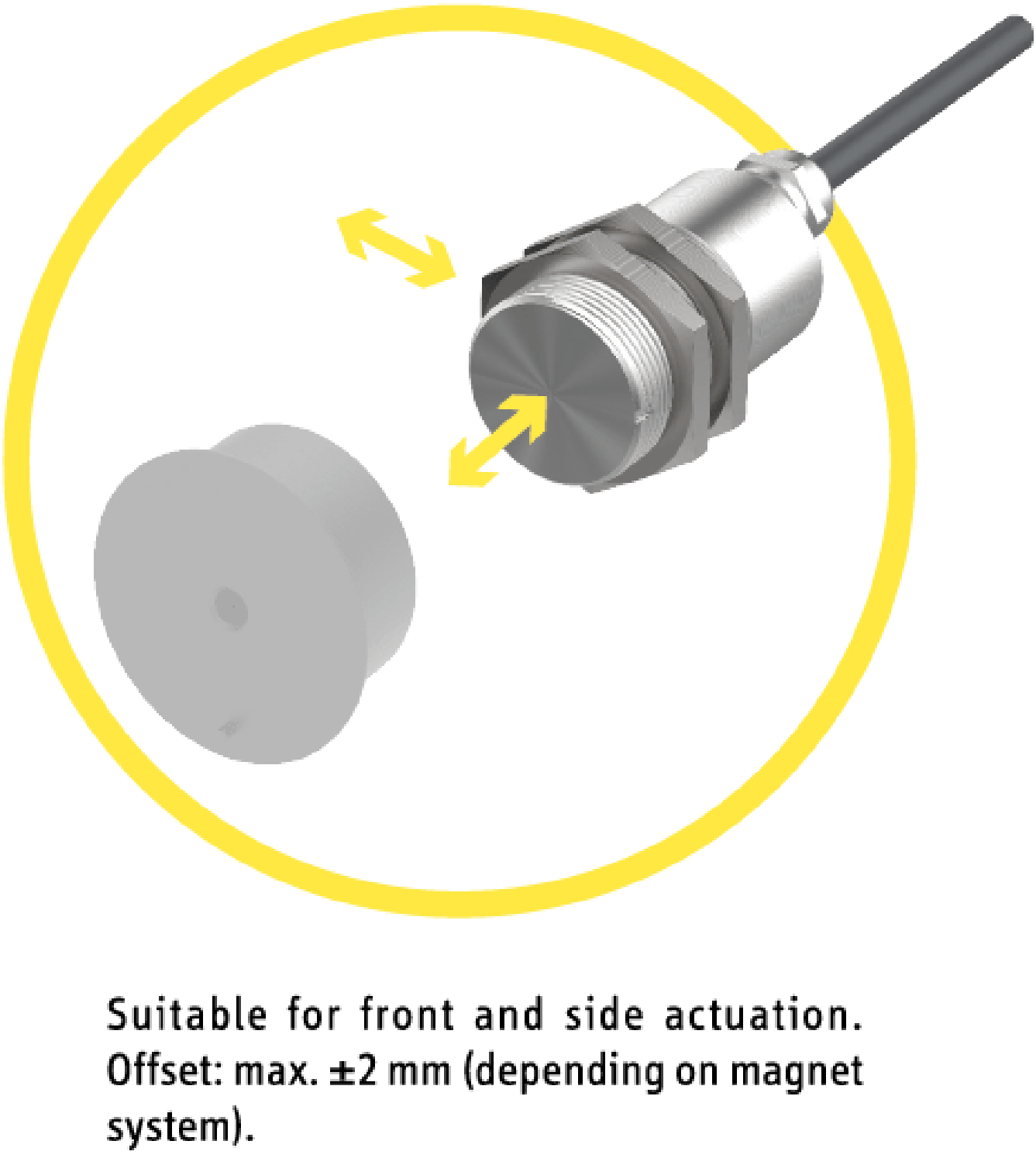

elobau GmbH & Co. KG
Zeppelinstr. 44
88299 Leutkirch, Germany

Tel.: +49 (0) 7561 970-0
Fax: +49 (0) 7561 970-100

IMAGE 2/3

ORDERING KEY

	671V62I40	671V62K40	671V62MU0	671V62M40	671V62NU0
Stainless steel housing M30	x	x	x	x	x
Certified in accordance with Directive 2014/34/EU	x	x	x	x	x
Nickel-plated brass cable gland	x	x	x	x	x
Cable PVC Y-UL2517, UL-approved 1m *)	-	-	x	-	x
Cable PVC LIYCYW shielded, 1m *)	x	x	-	x	-
Encapsulated (mb), without potential clamp	-	-	x	x	-
Encapsulated (mb), with potential clamp	-	-	-	-	x
Intrinsically safe (ia), without potential clamp	x	-	-	-	-
Intrinsically safe (ia), with potential clamp	-	x	-	-	-
N.O./N.O. contacts	x	x	x	x	x
N.O./N.C. contacts	-	-	-	-	-
Coded	x	x	x	x	x
Uncoded	-	-	-	-	-

	671V62N40	671271IU012	671271I40	671271K40	671271MU0
Stainless steel housing M30	x	x	x	x	x
Certified in accordance with Directive 2014/34/EU	x	x	x	x	x
Nickel-plated brass cable gland	x	x	x	x	x
Cable PVC Y-UL2517, UL-approved 1m *)	-	x	-	-	x
Cable PVC LIYCYW shielded, 1m *)	x	-	x	x	-
Encapsulated (mb), without potential clamp	-	-	-	-	x
Encapsulated (mb), with potential clamp	x	-	-	-	-
Intrinsically safe (ia), without epotential clamp	-	x	x	-	-
Intrinsically safe (ia), with potential clamp	-	-	-	x	-
N.O./N.O. contacts	x	-	-	-	-
N.O./N.C. contacts	-	x	x	x	x
Coded	x	x	x	x	x
Uncoded	-	-	-	-	-

* Other cable lengths on request

elobau GmbH & Co. KG
Zeppelinstr. 44
88299 Leutkirch, Germany

Tel.: +49 (0) 7561 970-0
Fax: +49 (0) 7561 970-100

IMAGE 3/3

MATCHING ACTUATORS

Actuators	Actuation direction	671V62I40			671V62K40		
		$S_{o\,min}$	S_{ao}	S_{ar}	$S_{o\,min}$	S_{ao}	S_{ar}
304 200 00 V	Front	0.5	4	14	0.5	4	16
304 200 00 VH		0.5	4	14	0.5	4	16
304 200 00 VS		3	7	20	3	7	23
304 200 00 SH		3	7	20	3	7	23

$S_{o\,min}$ = minimum switching distance (mm), S_{ao} = operating distance (mm), S_{ar} = assured switch-off distance (mm)

elobau GmbH & Co. KG
Zeppelinstr. 44
88299 Leutkirch, Germany

Tel.: +49 (0) 7561 970-0
Fax: +49 (0) 7561 970-100

Características do artigo

Attribute	671V62I40	671271M40	671V62M40	671271IU012	671271I40	671271K40
Guideline	2014/34/EU					
Type examination certificate	BVS 03 ATEX E 126 X					
Actuators (standard)	304 200 00V; 304 200 00VH (hygienic version)					
Notified body QM	CE 0123					
Actuators (amplified)	304 200 00VS; 304 200 00SH (hygienic version)					
Version gas	EX II 1G Ex ia IIC T6/T5 Ga	EX II 2G Ex mb IIC T6/T5 Gb		EX II 1/2G Ex ia IIC T6/T5 Ga/Gb	EX II 1G Ex ia IIC T6/T5 Ga	
Contact form	NO/NO	NO/NC	NO/NO	NO/NC		
Version dust	EX II 1D Ex ia IIIC IP68 T_{200}105°C Da	EX II 2D Ex mb IIIC IP68 T105°C Db		EX II 1D Ex ia IIIC IP68 T_{200}105°C Da		
Actuation	front					
Switching principle	magnetic					
Technology	Reed					
Ambient temperature range Ta, (Ii total: 60 ... 150 mA)	T6: -25°C..+50° T5:T105°C: -25°C..+70°C	-		T6: -25°C..+50° T5:T105°C: -25°C..+70°C		
Ambient temperature range Ta, (In total: 60 ... 150 mA)	-	T6: -25°C..+50°C T5:T105°C: -25°C..+70°C		-		
Use in zone (EX)	0, 1, 2 and 20, 21, 22	1 , 2 and 21, 22		0/1 , 1, 2 and 20, 21, 22	0, 1, 2 and 20, 21, 22	
Switching frequency	5 Hz					
Pollution degree	3					
Effective internal capacitance (Ci)	2 nF	-		2 nF		
Effective internal inductance (Li)	10 µH	-		10 µH		
Series resistor	22 Ohm					
Rated voltage Un (mb)	-	24 V AC/DC		-		
Max. input voltage Ui (i)	24 V AC/DC	-		24 V AC/DC		
Structure acc. to EN ISO 13849-1	Two-channel					
Coding acc. to EN ISO 14119	Low					
B10d acc. to EN ISO 13849-1	4000000	20000000	4000000	20000000		
Type acc. to EN ISO 14119	4					
Mission time in years	20 a					

elobau GmbH & Co. KG
Zeppelinstr. 44
88299 Leutkirch, Germany

Tel.: +49 (0) 7561 970-0
Fax: +49 (0) 7561 970-100

Attribute	671V62I40	671271M40	671V62M40	671271IU012	671271I40	671271K40
Assured switching distance (Sao) with actuator (standard)	4 mm					
Assured switching distance (Sao) with actuator (amplified)	7 mm					
Minimum switching distance (So min) with actuator (standard)	0.5 mm					
Minimum switching distance (So min) with actuator (amplified)	3 mm					
Assured switch-off distance (Sar) with actuator (standard)	16 mm					
Assured switch-off distance (Sar) with actuator (amplified)	20 mm	23 mm	20 mm	23 mm		
Housing design	cylindrical					
Minimum installation distance (between two sensors)	50 mm					
Dimensions	M30 x 53 mm					
Detent present	no					
Earth terminal	no					yes
Housing material	Edelstahl					
Cable material	PVC					
Housing colour	silber					
Nut material	Edelstahl					
Protection class	IP68 10bar					
Min. storage temperature	-25 °C					
Max. storage temperature	75 °C					
Ambient temperature range Ta, (Ii total: 0 ... 60 mA)	T6: -25°C..+70°C T5:T105°C: -25°C..+75°C	–		T6: -25°C..+70°C T5:T105°C: -25°C..+75°C		
Ambient temperature range Ta, (In total: 0 ... 60 mA)	–	T6: -25°C..+70°C T5:T105°C: -25°C..+75°C		–		
Shock resistance (Norm)	30g / 11ms					
Vibration resistance (Norm)	10 ... 55 Hz					
Mounting type	Fastening nut					

elobau GmbH & Co. KG
Zeppelinstr. 44
88299 Leutkirch, Germany

Tel.: +49 (0) 7561 970-0
Fax: +49 (0) 7561 970-100

Attribute	671V62I40	671271M40	671V62M40	671271IU012	671271I40	671271K40
Thread	M30					
Cable type	LIYCYW			Y - UL 2517	LIYCYW	
Cable colour	grau			schwarz	grau	
Cable length	1 m					

elobau GmbH & Co. KG
Zeppelinstr. 44
88299 Leutkirch, Germany

Tel.: +49 (0) 7561 970-0
Fax: +49 (0) 7561 970-100

Attribute	671271MU0	671271NU0	671271N40	671V62MU0	671V62NU0	671V62N40
Guideline	2014/34/EU					
Type examination certificate	BVS 03 ATEX E 126 X					
Actuators (standard)	304 200 00V; 304 200 00VH (hygienic version)					
Notified body QM	CE 0123					
Actuators (amplified)	304 200 00VS; 304 200 00SH (hygienic version)					
Version gas	EX II 2G Ex mb IIC T6/T5 Gb					
Contact form	NO/NC			NO/NO		
Version dust	EX II 2D Ex mb IIIC IP68 T105°C Db					
Actuation	front					
Switching principle	magnetic					
Technology	Reed					
Ambient temperature range Ta, (Ii total: 60 ... 150 mA)	-					
Ambient temperature range Ta, (In total: 60 ... 150 mA)	T6: -25°C..+50°C T5:T105°C: -25°C..+70°C					
Use in zone (EX)	1 , 2 and 21, 22					
Switching frequency	5 Hz					
Pollution degree	3					
Effective internal capacitance (Ci)	-					
Effective internal inductance (Li)	-					
Series resistor	22 Ohm					
Rated voltage Un (mb)	24 V AC/DC					
Max. input voltage Ui (i)	-					
Structure acc. to EN ISO 13849-1	Two-channel					
Coding acc. to EN ISO 14119	Low					
B10d acc. to EN ISO 13849-1	20000000					
Type acc. to EN ISO 14119	4					
Mission time in years	20 a					
Assured switching distance (Sao) with actuator (standard)	4 mm					
Assured switching distance (Sao) with actuator (amplified)	7 mm					

elobau GmbH & Co. KG
Zeppelinstr. 44
88299 Leutkirch, Germany

Tel.: +49 (0) 7561 970-0
Fax: +49 (0) 7561 970-100

Attribute	671271MU0	671271NU0	671271N40	671V62MU0	671V62NU0	671V62N40
Minimum switching distance (So min) with actuator (standard)	0.5 mm					
Minimum switching distance (So min) with actuator (amplified)	3 mm					
Assured switch-off distance (Sar) with actuator (standard)	16 mm					
Assured switch-off distance (Sar) with actuator (amplified)	23 mm			20 mm		
Housing design	cylindrical					
Minimum installation distance (between two sensors)	50 mm					
Dimensions	M30 x 53 mm					
Detent present	no					
Earth terminal	no	yes		no	yes	
Housing material	Edelstahl					
Cable material	PVC					
Housing colour	silber					
Nut material	Edelstahl					
Protection class	IP68 10bar					
Min. storage temperature	-25 °C					
Max. storage temperature	75 °C					
Ambient temperature range Ta, (Ii total: 0 ... 60 mA)	-					
Ambient temperature range Ta, (In total: 0 ... 60 mA)	T6: -25°C..+70°C T5:T105°C: -25°C..+75°C					
Shock resistance (Norm)	30g / 11ms					
Vibration resistance (Norm)	10 ... 55 Hz					
Mounting type	Fastening nut					
Thread	M30					
Cable type	Y - UL 2517		LIYCYW	Y - UL 2517		LIYCYW
Cable colour	schwarz		grau	schwarz		grau
Cable length	1 m					