elobau GmbH & Co. KG
Zeppelinstr. 44
88299 Leutkirch, Germany

Tel.: +49 (0) 7561 970-0
Fax: +49 (0) 7561 970-100



eloProtect E - Sensor de segurança RFID modelo 153ESK

O sensor de segurança 153ESK eloProtectE utiliza a tecnologia RFID proporcionando ao usuário elevado nível de segurança graças à possibilidade de codificação individual entre sensor e atuador. Como resultado, a proteção contra violação pode ser selecionada de acordo com a aplicação e aumenta a segurança da aplicação.

O uso da tecnologia RFID simplifica a montagem deste sensor devido às tolerâncias maiores de comutação entre sensor e atuador.

O monitoramento direto através da entrada EDM é possível graças à eletrônica de avaliação integrada ao sensor e à alta capacidade de comutação. Devido à alta capacidade de chaveamento das saídas (400mA), um relé de segurança adicional nem sempre é necessário.

Este sensor RFID permite a instalação em série de até 30 sensores.

Especificação Técnica

- Sinal de saída à cabo ou através de conector M12
- Tipo de contato: OSSD
- LED opicional (3-cores)
- Sinais de saída: 2
- Sinal de saída/diagnóstico: 1
- Sinais de entrada de segurança: 2
- Classe de proteção IP6K9K (ISO 20653)
- Dispositivo autônomo (entrada EDM)
- Design mais compacto disponível no mercado
- Montagem em série de até 30 sensores
- Tempo de resposta mais rápido

elobau GmbH & Co. KG
Zeppelinstr. 44
88299 Leutkirch, Germany

Tel.: +49 (0) 7561 970-0
Fax: +49 (0) 7561 970-100

Desenho técnico

IMAGE 1/3

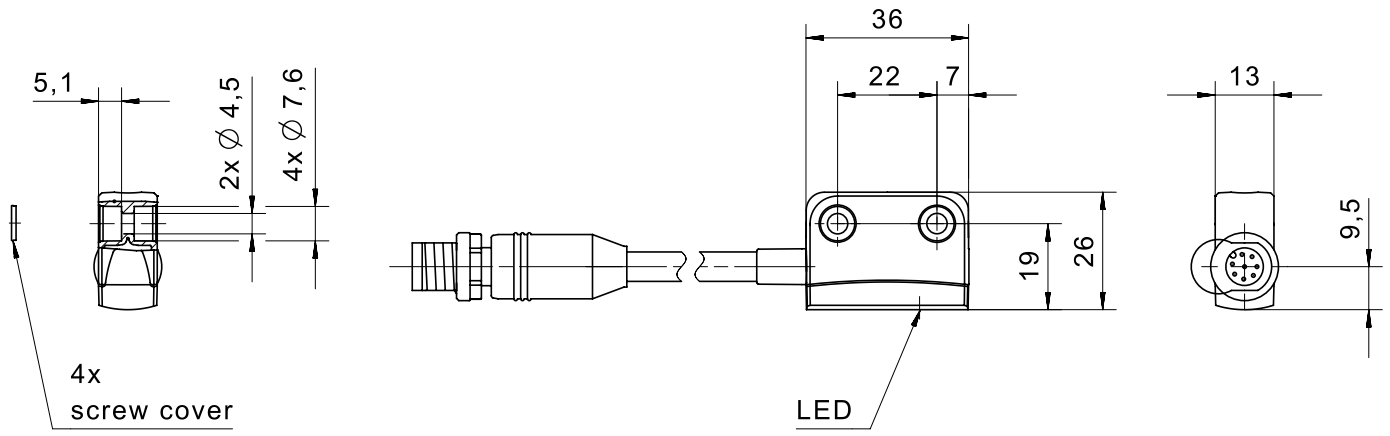

IMAGE 2/3

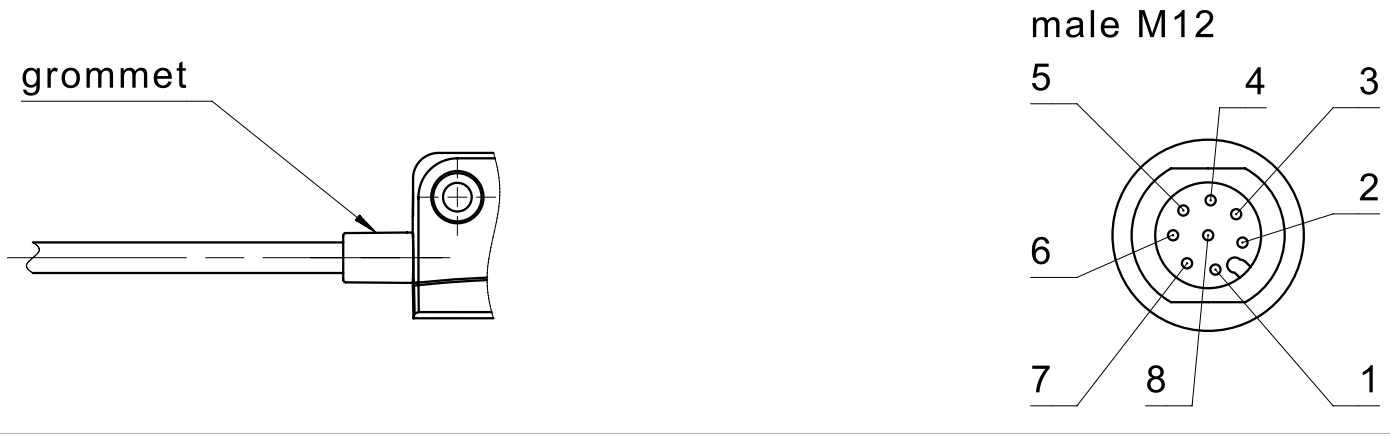

elobau GmbH & Co. KG
Zeppelinstr. 44
88299 Leutkirch, Germany

Tel.: +49 (0) 7561 970-0
Fax: +49 (0) 7561 970-100

IMAGE 3/3

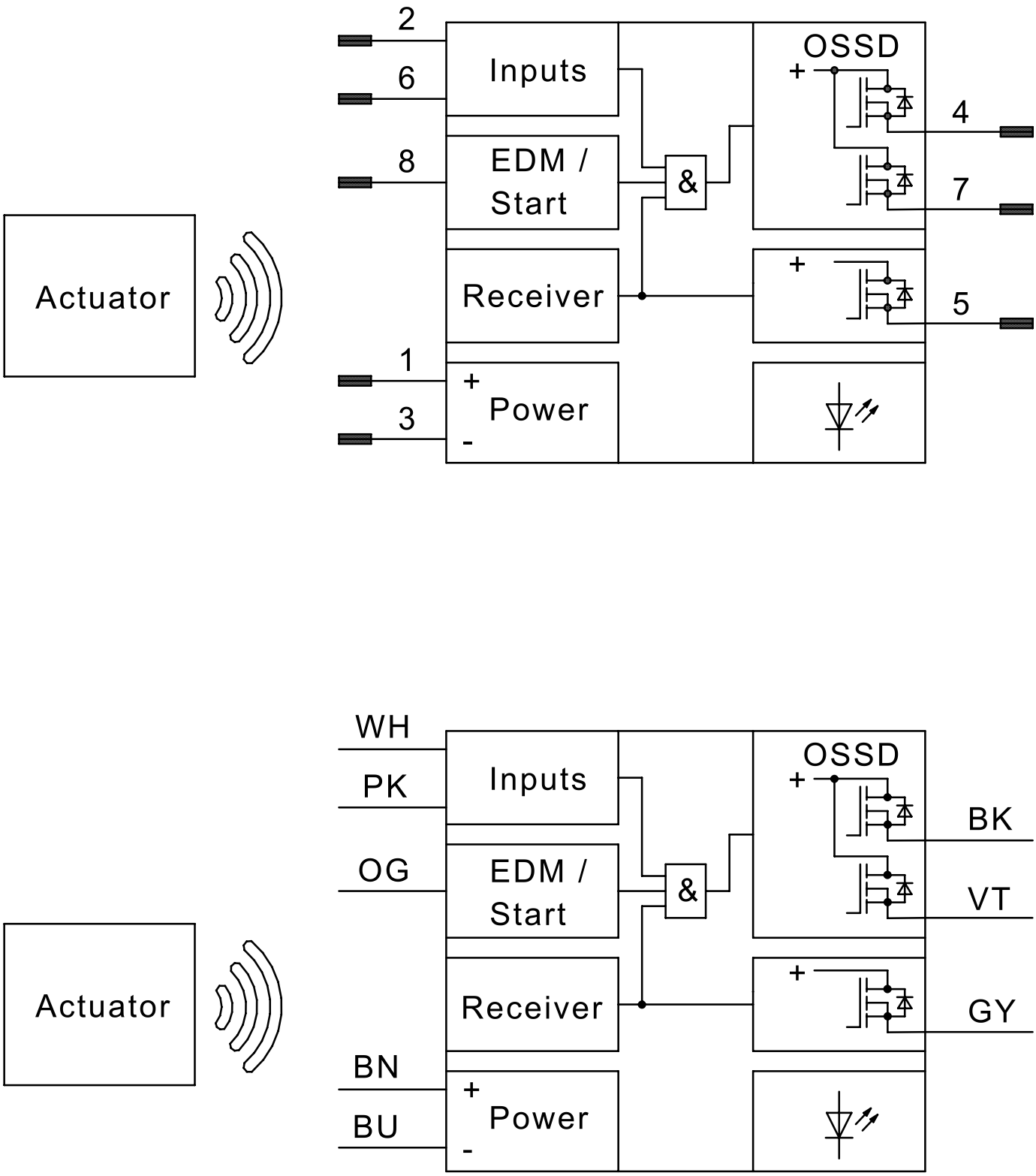

elobau GmbH & Co. KG
Zeppelinstr. 44
88299 Leutkirch, Germany

Tel.: +49 (0) 7561 970-0
Fax: +49 (0) 7561 970-100

Product options

IMAGE 1/2

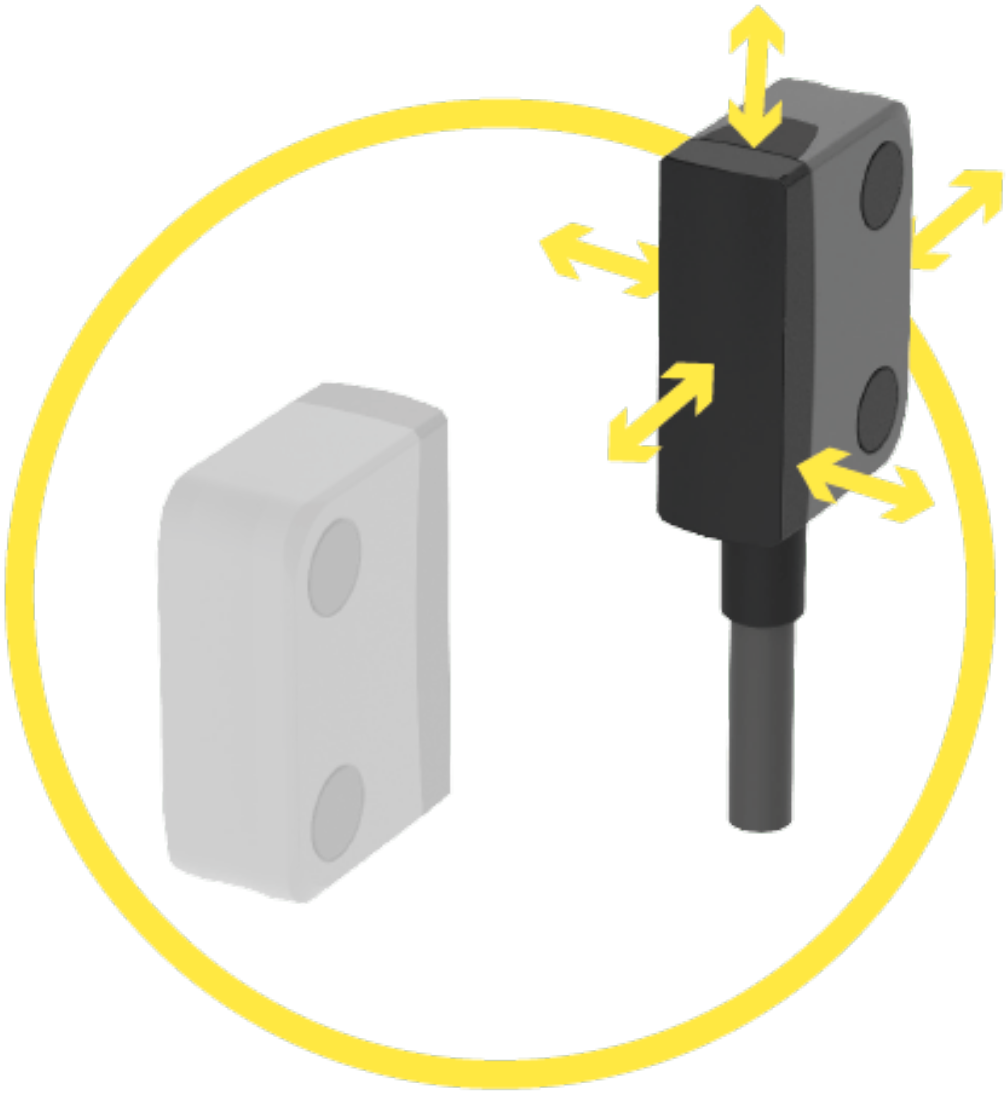

Suitable for actuation from any direction. Operating distance (Sao) 8 mm. Assured switch-off distance (Sar) 18 mm.

elobau GmbH & Co. KG
Zeppelinstr. 44
88299 Leutkirch, Germany

Tel.: +49 (0) 7561 970-0
Fax: +49 (0) 7561 970-100

IMAGE 2/2

ORDERING KEY

153 ESK	00					Safety sensor, electronic, RFID
		K				Connection cable – PVC - 1m
		J				Connection pigtail – PVC – M12, 8-pin
			1			Standard-coded
			2			Unique (actuator included with sensor)
			3			Programmable
				1		EDM input automatic
				2		EDM input manual (start push button)
						Other available cable lengths (only with "K" at 9th position)
					-3	3 m
					-5	5 m
					-10	10 m
						Other cable materials, cable lengths and connector types on request

elobau GmbH & Co. KG
Zeppelinstr. 44
88299 Leutkirch, Germany

Tel.: +49 (0) 7561 970-0
Fax: +49 (0) 7561 970-100

Características do artigo

Attribute	153ESK00J11	153ESK00J12	153ESK00J21	153ESK00J22	153ESK00J31	153ESK00J32
Max. switching current at safety output	0.4 A					
Max. switching current at control output	0.05 A					
Contact form	OSSD					
Switching frequency	3 Hz					
Assured switching distance (Sao)	8 mm					
Assured switch-off distance (Sar)	18 mm					
Minimum switching distance (S0 min)	0.5 mm					
Polarity reversal protection	yes					
Number of electronic safety outputs	2					
Number of electronic control outputs	1					
Number of safety inputs	2					
EDM/start input	yes					
Start function	automatic	monitored	automatic	monitored	automatic	monitored
Utilization category	AC-12 / DC-13					
No-load current I0	30 mA					
Rated operating voltage (Ue)	24 V					
Rated insulation voltage (Ui)	50 V					
Rated impulse withstand voltage (Uimp)	1000 V					
Current consumption per input	2.75 mA					
Power consumption	24 W					
LED display	three-coloured					
Actuation	arbitrary					
Switching principle	electronic					
Hysteresis	2 mm					
wurde angepasst (Number)	30					
Technology	RFID					
Coding variant	coded		unikat		individually coded	

elobau GmbH & Co. KG
Zeppelinstr. 44
88299 Leutkirch, Germany

Tel.: +49 (0) 7561 970-0
Fax: +49 (0) 7561 970-100

Attribute	153ESK00J11	153ESK00J12	153ESK00J21	153ESK00J22	153ESK00J31	153ESK00J32
Repeating accuracy	0,5 mm					
Rated switching distance (Sn)	12 mm					
Pollution degree	2					
Overvoltage category	II					
Active surface (Number)	1					
Turn-on delay (ton)	75 ms					
Readiness delay (tv)	1000 ms					
Voltage drop (Ud)	0.75 V					
Stabilised PELV/SELV power supply	required					
Fuse operating voltage	1A fast					
Internal electronic fuse	yes					
Short-circuit detection	yes					
Cross-short detection	yes					
Weight	45 g					
PL acc. to EN ISO 13849-1	e					
SIL acc. to IEC 61508	3					
SIL CL acc. to IEC 62061	3					
PFHD according to IEC 61508	2,24x10^-9 1/h					
Category acc. to EN ISO 13849-1	4					
Coding acc. to EN ISO 14119	Low		High			
Type acc. to EN ISO 14119	4					
Mission time in years	20 a					
Structure acc. to EN ISO 13849-1	Two-channel					
Hardware fault tolerance (HFT) according to IEC 61508	1					
Housing design	rectangular					
Dimensions	26 x 36 x 13 mm					
Free zone	50 mm					
Actuation frequency	180 1/h					
Minimum installation distance (between two sensors)	150 mm					

elobau GmbH & Co. KG
Zeppelinstr. 44
88299 Leutkirch, Germany

Tel.: +49 (0) 7561 970-0
Fax: +49 (0) 7561 970-100

Attribute	153ESK00J11	153ESK00J12	153ESK00J21	153ESK00J22	153ESK00J31	153ESK00J32
cannot be mounted flush	yes					
Housing material	PBT, PC					
Cable material	PVC					
Housing colour	grau, schwarz					
Protection class, connector	IP67 DIN EN 60529					
Operating temperature min.	-25 °C					
Max. operating temperature	70 °C					
Min. cable temperature range, moving	-5 °C					
Max. cable temperature range, moving	80 °C					
Min. cable temperature range, fixed installation	-30 °C					
Max. cable temperature range, fixed installation	80 °C					
Shock resistance (Norm)	30 g / 11 ms					
Vibration resistance (Norm)	10 ... 55 Hz				10...55 Hz	10 ... 55 Hz
Protection class, housing	IP67 DIN EN 60529 - IP6K9K ISO 20653					
Min. storage temperature	-25 °C					
Max. storage temperature	70 °C					
Continuous shock resistance (Norm)	10 g / 16 ms					
Relative humidity	5 - 85 %					
Air pressure	860 - 1060 hPa					
Delta tmax	0.5 °C/min					
Mounting type	screwed					
Torque for fastening screws	0.7 N m					
Connector type	M12x1 - 8 polig					
Cable type	LiYY					
Cable length	0.15 m					
Number of strands	8					
Wire cross section	0.25 mm²					
Cable colour	grau					

elobau GmbH & Co. KG
Zeppelinstr. 44
88299 Leutkirch, Germany

Tel.: +49 (0) 7561 970-0
Fax: +49 (0) 7561 970-100

Attribute	153ESK00J11	153ESK00J12	153ESK00J21	153ESK00J22	153ESK00J31	153ESK00J32
Certified in accordance with	EN ISO 13849-1 IEC 61508 IEC 62061 EN 60947-5-3 UL 508 / CSA 22.5	EN ISO 13849-1 IEC 61508 IEC 62061 EN 60947-5-3 UL 508 / CSA 22.7	EN ISO 13849-1 IEC 61508 IEC 62061 EN 60947-5-3 UL 508 / CSA 22.9	EN ISO 13849-1 IEC 61508 IEC 62061 EN 60947-5-3 UL 508 / CSA 22.11	EN ISO 13849-1 IEC 61508 IEC 62061 EN 60947-5-3 UL 508 / CSA 22.13	EN ISO 13849-1 IEC 61508 IEC 62061 EN 60947-5-3 UL 508 / CSA 22.15
CE label	yes					
Possible actuators	153EBK001					

elobau GmbH & Co. KG
Zeppelinstr. 44
88299 Leutkirch, Germany

Tel.: +49 (0) 7561 970-0
Fax: +49 (0) 7561 970-100

Attribute	153ESK00K11	153ESK00K12	153ESK00K21	153ESK00K22	153ESK00K31	153ESK00K32
Max. switching current at safety output	0.4 A					
Max. switching current at control output	0.05 A					
Contact form	OSSD					
Switching frequency	3 Hz					
Assured switching distance (Sao)	8 mm					
Assured switch-off distance (Sar)	18 mm					
Minimum switching distance (S0 min)	0.5 mm					
Polarity reversal protection	yes					
Number of electronic safety outputs	2					
Number of electronic control outputs	1					
Number of safety inputs	2					
EDM/start input	yes					
Start function	automatic	monitored	automatic	monitored	automatic	monitored
Utilization category	AC-12 / DC-13					
No-load current I0	30 mA					
Rated operating voltage (Ue)	24 V					
Rated insulation voltage (Ui)	50 V					
Rated impulse withstand voltage (Uimp)	1000 V					
Current consumption per input	2.75 mA					
Power consumption	24 W					
LED display	three-coloured					
Actuation	arbitrary					
Switching principle	electronic					
Hysteresis	2 mm					
wurde angepasst (Number)	30					
Technology	RFID					
Coding variant	coded		unikat		individually coded	
Repeating accuracy	0,5 mm					
Rated switching distance (Sn)	12 mm					

elobau GmbH & Co. KG
Zeppelinstr. 44
88299 Leutkirch, Germany

Tel.: +49 (0) 7561 970-0
Fax: +49 (0) 7561 970-100

Attribute	153ESK00K11	153ESK00K12	153ESK00K21	153ESK00K22	153ESK00K31	153ESK00K32
Pollution degree	2					
Overvoltage category	II					
Active surface (Number)	1					
Turn-on delay (ton)	75 ms					
Readiness delay (tv)	1000 ms					
Voltage drop (Ud)	0.75 V					
Stabilised PELV/SELV power supply	required					
Fuse operating voltage	1A fast					
Internal electronic fuse	yes					
Short-circuit detection	yes					
Cross-short detection	yes					
Weight	70 g					
PL acc. to EN ISO 13849-1	e					
SIL acc. to IEC 61508	3					
SIL CL acc. to IEC 62061	3					
PFHD according to IEC 61508	2,24x10^-9 1/h					
Category acc. to EN ISO 13849-1	4					
Coding acc. to EN ISO 14119	Low		High			
Type acc. to EN ISO 14119	4					
Mission time in years	20 a					
Structure acc. to EN ISO 13849-1	Two-channel					
Hardware fault tolerance (HFT) according to IEC 61508	1					
Housing design	rectangular					
Dimensions	26 x 36 x 13 mm					
Free zone	50 mm					
Actuation frequency	180 1/h					
Minimum installation distance (between two sensors)	150 mm					
cannot be mounted flush	yes					
Housing material	PBT, PC					
Cable material	PVC					
Housing colour	grau, schwarz					

elobau GmbH & Co. KG
Zeppelinstr. 44
88299 Leutkirch, Germany

Tel.: +49 (0) 7561 970-0
Fax: +49 (0) 7561 970-100

Attribute	153ESK00K11	153ESK00K12	153ESK00K21	153ESK00K22	153ESK00K31	153ESK00K32
Protection class, connector	–					
Operating temperature min.	-25 °C					
Max. operating temperature	70 °C					
Min. cable temperature range, moving	-5 °C					
Max. cable temperature range, moving	80 °C					
Min. cable temperature range, fixed installation	-30 °C					
Max. cable temperature range, fixed installation	80 °C					
Shock resistance (Norm)	30 g / 11 ms					
Vibration resistance (Norm)	10 ... 55 Hz					
Protection class, housing	IP67 DIN EN 60529 - IP6K9K ISO 20653					
Min. storage temperature	-25 °C					
Max. storage temperature	70 °C					
Continuous shock resistance (Norm)	10 g / 16 ms					
Relative humidity	5 - 85 %					
Air pressure	860 - 1060 hPa					
Delta tmax	0.5 °C/min					
Mounting type	screwed					
Torque for fastening screws	0.7 N m					
Connector type	–					
Cable type	LiYY					
Cable length	1 m					
Number of strands	8					
Wire cross section	0.25 mm²					
Cable colour	grau					
Certified in accordance with	EN ISO 13849-1 IEC 61508 IEC 62061 EN 60947-5-3 UL 508 / CSA 22.4	EN ISO 13849-1 IEC 61508 IEC 62061 EN 60947-5-3 UL 508 / CSA 22.6	EN ISO 13849-1 IEC 61508 IEC 62061 EN 60947-5-3 UL 508 / CSA 22.8	EN ISO 13849-1 IEC 61508 IEC 62061 EN 60947-5-3 UL 508 / CSA 22.10	EN ISO 13849-1 IEC 61508 IEC 62061 EN 60947-5-3 UL 508 / CSA 22.12	EN ISO 13849-1 IEC 61508 IEC 62061 EN 60947-5-3 UL 508 / CSA 22.14
CE label	yes					
Possible actuators	153EBK001					