elobau GmbH & Co. KG
Zeppelinstr. 44
88299 Leutkirch, Germany

Tel.: +49 (0) 7561 970-0
Fax: +49 (0) 7561 970-100



Safety sensor 171

Our bestsellers with a design common to the market: magnetically actuated safety sensors in M30 housing. The large number of variants available from elobau provide solutions for almost all applications.

Technical specification

- Available connection types: cable outlet, M8 and M12 housing connectors
- Simple diagnosis through optional LED and control contact
- Optionally with LED display

Technical drawing

IMAGE 1/3

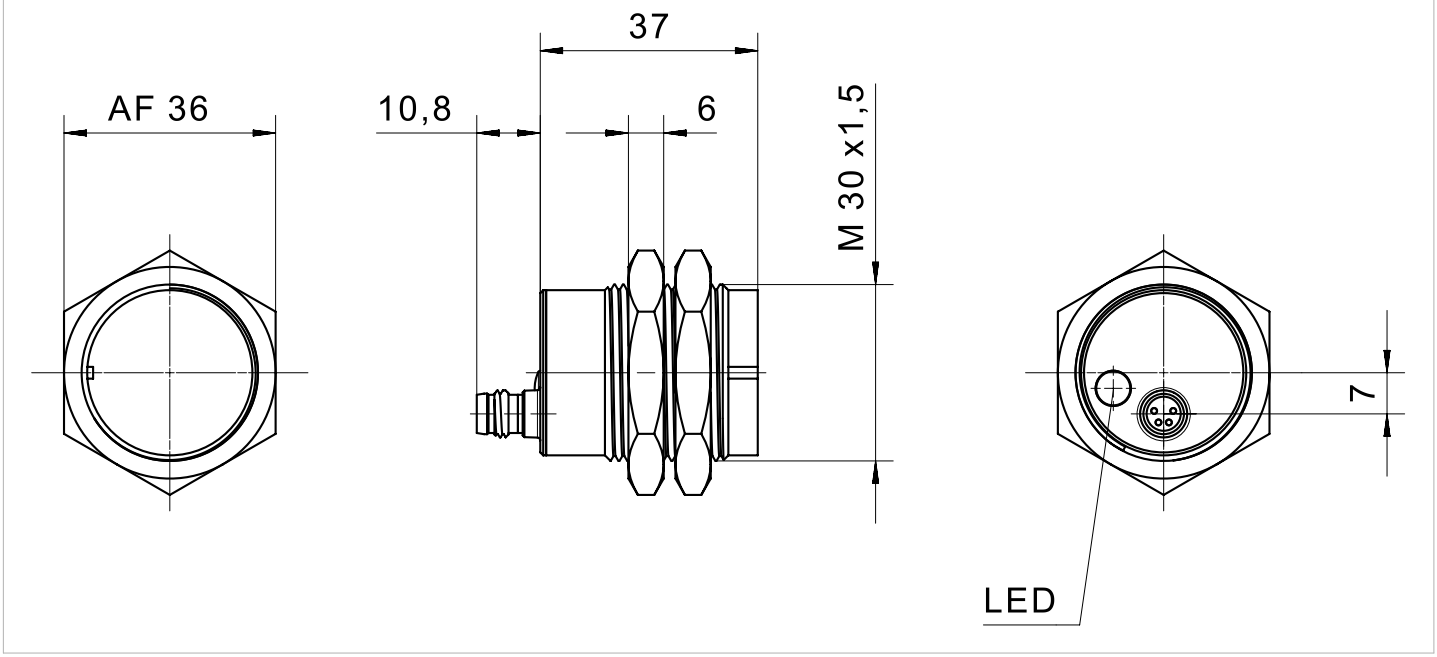

elobau GmbH & Co. KG
Zeppelinstr. 44
88299 Leutkirch, Germany

Tel.: +49 (0) 7561 970-0
Fax: +49 (0) 7561 970-100

IMAGE 2/3

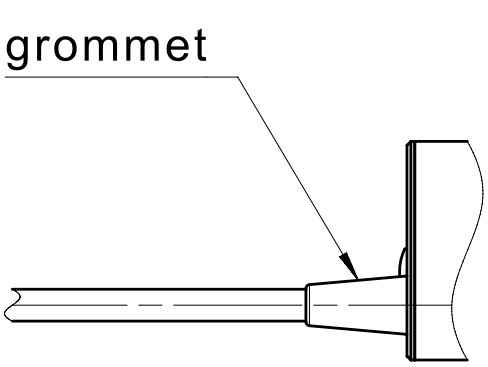

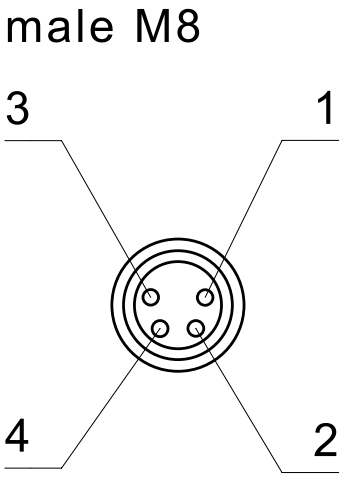

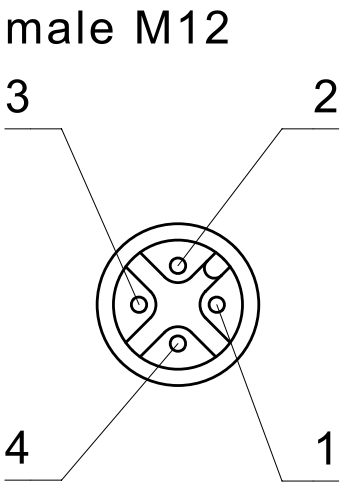

elobau GmbH & Co. KG
Zeppelinstr. 44
88299 Leutkirch, Germany

Tel.: +49 (0) 7561 970-0
Fax: +49 (0) 7561 970-100

IMAGE 3/3

171271AY, 171271A0D

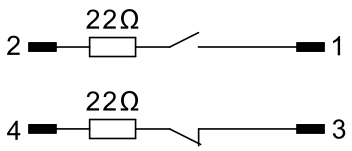

171271AZ, 171271A0E

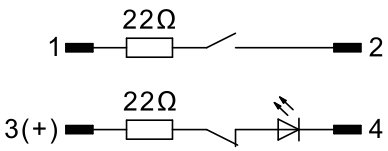

171V62AY, 171V62A0D

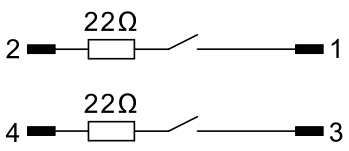

171271

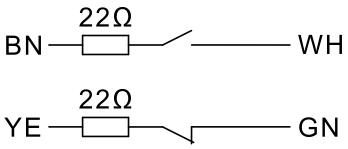

171271AA

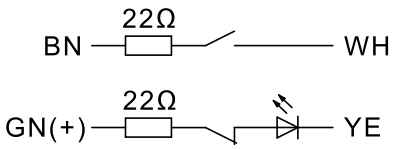

171V62,

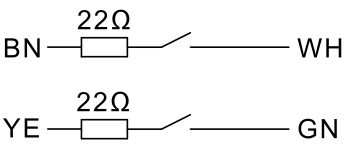

171571

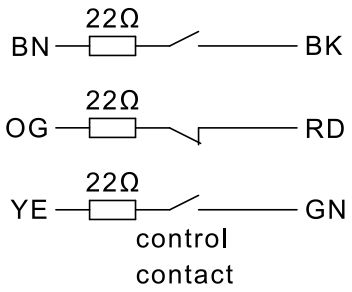

171571AA

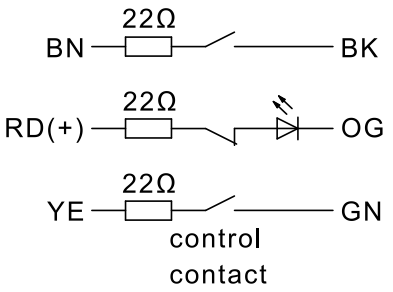

171562

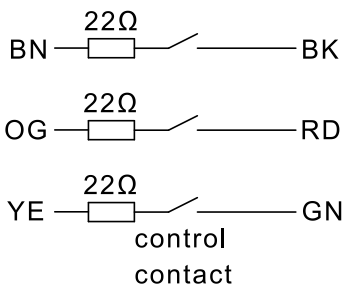

elobau GmbH & Co. KG
Zeppelinstr. 44
88299 Leutkirch, Germany

Tel.: +49 (0) 7561 970-0
Fax: +49 (0) 7561 970-100

Product options

IMAGE 1/3

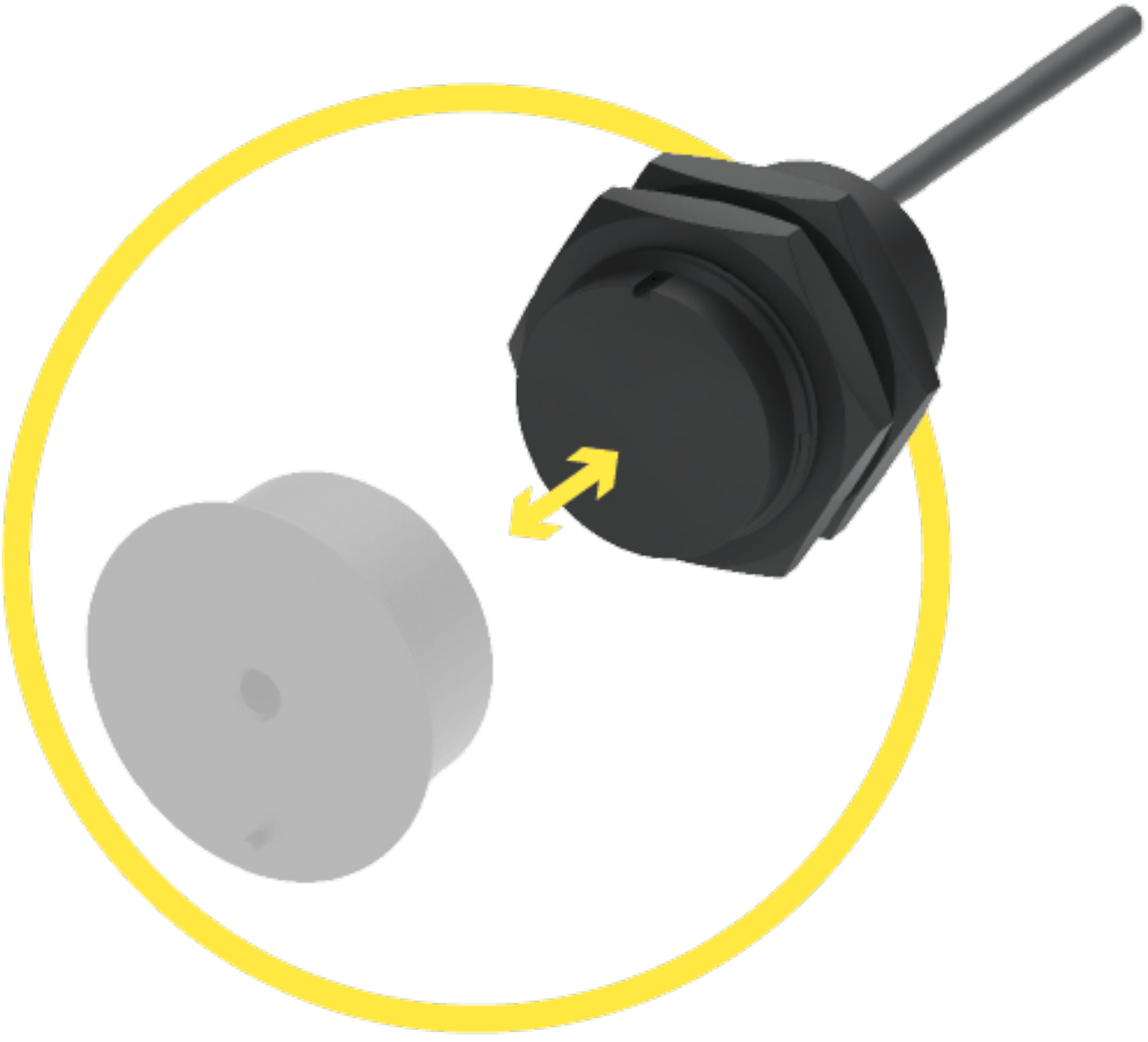

Suitable for front actuation. Assured switching distance (Sao) of 4 mm with standard actuators, 7 mm with extended-range actuators. Assured switch-off distance (Sar) of up to 17 mm with standard actuators, up to 23 mm with extended-range actuators

elobau GmbH & Co. KG
Zeppelinstr. 44
88299 Leutkirch, Germany

Tel.: +49 (0) 7561 970-0
Fax: +49 (0) 7561 970-100

IMAGE 2/3

ORDERING KEY

	171V62	171V62AY	171V62A0D	171271	171271AA
Plastic housing M30	x	x	x	x	x
M12x1 connector, 4-pin, plastic	-	x	-	-	-
M8x1 connector, 4-pin, nickel-plated brass	-	-	x	-	-
Connection cable 1m*	x	-	-	x	x
N.O./N.O. contacts	x	x	x	-	-
N.O./N.C. contacts	-	-	-	x	x
Additional N.O. control contact	-	-	-	-	-
LED in series to N.C.	-	-	-	-	x
Coded	x	x	x	x	x
Uncoded	-	-	-	-	-

	171271AY	171271AZ	171271A0D	171271A0E	171562
Plastic housing M30	x	x	x	x	x
M12x1 connector, 4-pin, plastic	x	x	-	-	-
M8x1 connector, 4-pin, nickel-plated brass	-	-	x	x	-
Connection cable 1m*	-	-	-	-	x
N.O./N.O. contacts	-	-	-	-	x
N.O./N.C. contacts	x	x	x	x	-
Additional N.O. control contact	-	-	-	-	x
LED in series to N.C.	-	x	-	x	-
Coded	x	x	x	x	x
Uncoded	-	-	-	-	-

	171571	171571AA			
Plastic housing M30	x	x			
M12x1 connector, 4-pin, plastic	-	-			
M8x1 connector, 4-pin, nickel-plated brass	-	-			
Connection cable 1m*	x	x			
N.O./N.O. contacts	-	-			
N.O./N.C. contacts	x	x			
Additional N.O. control contact	x	x			
LED in series to N.C.	-	x			
Coded	x	x			
Uncoded	-	-			

* Other cable lengths, cable materials and connector types on request

elobau GmbH & Co. KG
Zeppelinstr. 44
88299 Leutkirch, Germany

Tel.: +49 (0) 7561 970-0
Fax: +49 (0) 7561 970-100

IMAGE 3/3

MATCHING ACTUATORS

Actuators	Actuation direction	171V62..			171262..			171271..			171562..			171571..			17127118		
		SO_{min}	S_{ao}	S_{ar}	SO_{min}	S_{ao}	S_{ar}	SO_{min}	S_{ao}	S_{ar}	SO_{min}	S_{ao}	S_{ar}	SO_{min}	S_{ao}	S_{ar}	SO_{min}	S_{ao}	S_{ar}
304 200 00/..V/..H	front	0,5	4	16	0,5	3	16	0,5	4	16	0,5	4	17	0,5	4	15	3	7	23
304 200 00 S/..VS/..SH		3	7	20	3	7	20	3	7	23	0,5	6	21	0,5	6	20	5	10	28

SO_{min} = minimum switching distance (mm), S_{ao} = operating distance (mm), S_{ar} = assured switch-off distance (mm)

elobau GmbH & Co. KG
Zeppelinstr. 44
88299 Leutkirch, Germany

Tel.: +49 (0) 7561 970-0
Fax: +49 (0) 7561 970-100

Article characteristics

Attribute	171V62AY	171V62A0D	171271AY	171271AZ	171271A0E	171271
Min. switching voltage	19.2 V DC					
Max. switching voltage	28.8 V DC					
Max. switching current	0.1 A					-
Max. switching current with LED	-			0.02 A		-
Max. switching power	3 W					
Switching frequency	5 Hz					
Assured switching distance (Sao)	3.5 mm		4 mm			
Assured switch-off distance (Sar)	16 mm					
Minimum switching distance (S0 min)	0.5 mm					
LED display	No			single-coloured		No
Actuation	front					
Switching principle	magnetic					
Series resistor	22 Ohm					
Technology	Reed					
Contact form	NO/NO		NO/NC			
Pollution degree	3					
Protection class	III					
Coding acc. to EN ISO 14119	Low					
B10d acc. to EN ISO 13849-1	20000000					
Type acc. to EN ISO 14119	4					
Mission time in years	20 a					
Structure acc. to EN ISO 13849-1	Two-channel					
Housing design	cylindrical					
Dimensions	M30 x 37 mm					
Minimum installation distance (between two sensors)	50 mm					
cannot be mounted flush	yes					
Detent present	no					
Housing material	PBT					

elobau GmbH & Co. KG
Zeppelinstr. 44
88299 Leutkirch, Germany

Tel.: +49 (0) 7561 970-0
Fax: +49 (0) 7561 970-100

Attribute	171V62AY	171V62A0D	171271AY	171271AZ	171271A0E	171271
Cable material	–					PVC
Nut material	PBT					
Housing colour	schwarz					
Protection class	IP67 DIN EN 60529	IP65 DIN EN 60529	IP67 DIN EN 60529		IP65 DIN EN 60529	IP67 DIN EN 60529
Protection class, connector	IP67 DIN EN 60529 (screwed) - IP65 DIN EN 60529 (plugged)	IP65 DIN EN 60529	IP67 DIN EN 60529 (screwed) - IP65 DIN EN 60529 (plugged)	IP67 DIN EN 60529	IP65 DIN EN 60529	–
Operating temperature min.	-25 °C					
Max. operating temperature	75 °C					
Min. cable temperature range, moving	–					-5 °C
Max. cable temperature range, moving	–					70 °C
Min. cable temperature range, fixed installation	–					-25 °C
Max. cable temperature range, fixed installation	–					70 °C
Shock resistance (Norm)	30g / 11ms					
Vibration resistance (Norm)	10 - 55Hz					
Min. storage temperature	-25 °C					–
Max. storage temperature	75 °C					–
Mounting type	Fastening nut					
Thread	M30					
Torque for nuts	10 N m					
Installation	arbitrary					
Weight	–					60 g
Connector type	M12x1 - 4 polig	M8x1 - 4 polig	M12x1 - 4 polig		M8x1 - 4 polig	–
Cable length	–					1 m
Number of strands	–					4
Wire cross section	–					0.25 mm²
Cable type	–					LiYY 4x0,25
Cable colour	–					grau
CE label	yes					no
Certified in accordance with	ETL					

elobau GmbH & Co. KG
Zeppelinstr. 44
88299 Leutkirch, Germany

Tel.: +49 (0) 7561 970-0
Fax: +49 (0) 7561 970-100

Attribute	171V62AY	171V62A0D	171271AY	171271AZ	171271A0E	171271
Possible actuators	30420000					

elobau GmbH & Co. KG
Zeppelinstr. 44
88299 Leutkirch, Germany

Tel.: +49 (0) 7561 970-0
Fax: +49 (0) 7561 970-100

Attribute	171271AA	171271A0D	171562	171571	171571AA	17127118
Min. switching voltage	19.2 V DC					
Max. switching voltage	28.8 V DC					
Max. switching current	0.1 A					–
Max. switching current with LED	0.02 A	–			0.02 A	–
Max. switching power	3 W					
Switching frequency	5 Hz					
Assured switching distance (Sao)	4 mm					7 mm
Assured switch-off distance (Sar)	16 mm		18 mm	15 mm		23 mm
Minimum switching distance (S0 min)	0.5 mm					3 mm
LED display	single-coloured	No			single-coloured	No
Actuation	front					
Switching principle	magnetic					
Series resistor	22 Ohm					
Technology	Reed					
Contact form	NO/NC		NO/NO/NO (Kontrollkontakt)			NO/NC
Pollution degree	3					
Protection class	III					
Coding acc. to EN ISO 14119	Low					
B10d acc. to EN ISO 13849-1	20000000	4000000	20000000			
Type acc. to EN ISO 14119	4					
Mission time in years	20 a					
Structure acc. to EN ISO 13849-1	Two-channel					
Housing design	cylindrical					
Dimensions	M30 x 37 mm					
Minimum installation distance (between two sensors)	50 mm					
cannot be mounted flush	yes					
Detent present	no					
Housing material	PBT					
Cable material	PVC	–	PVC			

elobau GmbH & Co. KG
Zeppelinstr. 44
88299 Leutkirch, Germany

Tel.: +49 (0) 7561 970-0
Fax: +49 (0) 7561 970-100

Attribute	171271AA	171271A0D	171562	171571	171571AA	17127118
Nut material	PBT					
Housing colour	schwarz					
Protection class	IP67 DIN EN 60529	IP65 DIN EN 60529	IP67 DIN EN 60529			
Protection class, connector	-	IP65 DIN EN 60529	-			
Operating temperature min.	-25 °C					
Max. operating temperature	75 °C		70 °C			75 °C
Min. cable temperature range, moving	-5 °C	-	-10 °C			-5 °C
Max. cable temperature range, moving	70 °C	-	105 °C			70 °C
Min. cable temperature range, fixed installation	-25 °C	-	-30 °C			-25 °C
Max. cable temperature range, fixed installation	70 °C	-	105 °C			70 °C
Shock resistance (Norm)	30g / 11ms					
Vibration resistance (Norm)	10 - 55Hz					
Min. storage temperature	-25 °C					-
Max. storage temperature	75 °C		70 °C			-
Mounting type	Fastening nut					
Thread	M30					
Torque for nuts	10 N m					
Installation	arbitrary					
Weight	60 g	-	60 g			
Connector type	-	M8x1 - 4 polig	-			
Cable length	1 m	-	1 m			
Number of strands	4	-	6			4
Wire cross section	0.25 mm²	-	0.22 mm²			0.25 mm²
Cable type	LiYY 4x0,25	-	LiYY 6x0,25			LiYY 4x0,25
Cable colour	grau	-	schwarz			grau
CE label	yes					no
Certified in accordance with	ETL					
Possible actuators	30420000					

elobau GmbH & Co. KG
Zeppelinstr. 44
88299 Leutkirch, Germany

Tel.: +49 (0) 7561 970-0
Fax: +49 (0) 7561 970-100

Attribute	171V62	171V62A0DPC	171271A0DPC	171V62PC	171271PC
Min. switching voltage	19.2 V DC				
Max. switching voltage	28.8 V DC				
Max. switching current	0.1 A				–
Max. switching current with LED	–				
Max. switching power	3 W				
Switching frequency	5 Hz				
Assured switching distance (Sao)	3.5 mm		4 mm	3.5 mm	4 mm
Assured switch-off distance (Sar)	16 mm				
Minimum switching distance (S0 min)	0.5 mm				
LED display	No				
Actuation	front				
Switching principle	magnetic				
Series resistor	22 Ohm				
Technology	Reed				
Contact form	NO/NO		NO/NC	NO/NO	NO/NC
Pollution degree	3				
Protection class	III				
Coding acc. to EN ISO 14119	Low				
B10d acc. to EN ISO 13849-1	20000000		4000000	20000000	
Type acc. to EN ISO 14119	4				
Mission time in years	20 a				
Structure acc. to EN ISO 13849-1	Two-channel				
Housing design	cylindrical				
Dimensions	M30 x 37 mm				
Minimum installation distance (between two sensors)	50 mm				
cannot be mounted flush	yes				
Detent present	no				
Housing material	PBT				
Cable material	PVC	–		PVC	
Nut material	PBT				

elobau GmbH & Co. KG
Zeppelinstr. 44
88299 Leutkirch, Germany

Tel.: +49 (0) 7561 970-0
Fax: +49 (0) 7561 970-100

Attribute	171V62	171V62A0DPC	171271A0DPC	171V62PC	171271PC
Housing colour	schwarz				
Protection class	IP67 DIN EN 60529	IP65 DIN EN 60529		IP67 DIN EN 60529	
Protection class, connector	–	IP65 DIN EN 60529		–	
Operating temperature min.	-25 °C				
Max. operating temperature	75 °C				
Min. cable temperature range, moving	-5 °C	–		-5 °C	
Max. cable temperature range, moving	70 °C	–		70 °C	
Min. cable temperature range, fixed installation	-25 °C	–		-25 °C	
Max. cable temperature range, fixed installation	70 °C	–		70 °C	
Shock resistance (Norm)	30g / 11ms				
Vibration resistance (Norm)	10 - 55Hz				
Min. storage temperature	-25 °C				–
Max. storage temperature	75 °C				–
Mounting type	Fastening nut				
Thread	M30				
Torque for nuts	10 N m				
Installation	arbitrary				
Weight	60 g	–		60 g	
Connector type	–	M8x1 - 4 polig		–	
Cable length	1 m	–		1 m	
Number of strands	4	–		4	
Wire cross section	0.25 mm²	–		0.25 mm²	
Cable type	LiYY 4x0,25	–		LiYY 4x0,25	
Cable colour	grau	–		grau	
CE label	yes				no
Certified in accordance with	ETL				
Possible actuators	30420000				