**elobau GmbH & Co. KG**
Zeppelinstr. 44
88299 Leutkirch, Germany

Tel.: +49 (0) 7561 970-0
Fax: +49 (0) 7561 970-100





# Micro push button switch 145MTR/MTG

## With night and function illumination.

Micro push button switch 145MR with function and night illumination is equipped with practical snap-in mounting. This Micro push button switch is designed for applications in which only low currents flow and a mechanical switch cannot therefore be used. Micro push button switch 145MR/MG, with the two-colour illumination function, is ideally suited for use in the automotive engineering sector, e.g. in joystick handles or armrests. The switching element, which is completely separated from the mechanics, resists dust, dirt and moisture, thanks to its IP67 protection class.

## Technical specifications

- 2 illumination colours can be controlled
- Long service life thanks to the magnetic actuation principle
- Available with various button colours and symbols to suit the application
- Wear-free reed contacts for low switching currents
- 2.5mm button stroke
- IP67 protection class for harsh operating conditions
- Optionally available with NAMUR wiring
- Can be connected with various common connectors e.g, Molex or AMP

**elobau GmbH & Co. KG**
Zeppelinstr. 44
88299 Leutkirch, Germany

Tel.: +49 (0) 7561 970-0
Fax: +49 (0) 7561 970-100



## Technical drawing

IMAGE 1/2

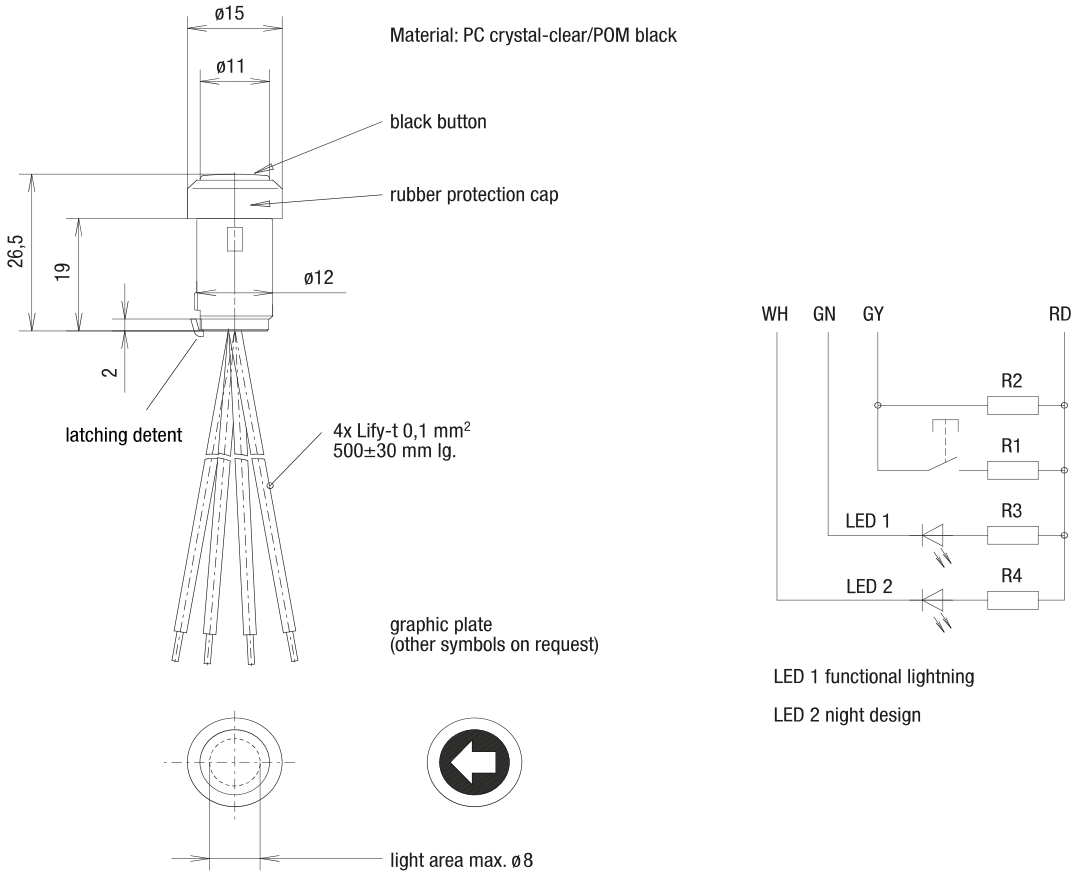

**elobau GmbH & Co. KG**
Zeppelinstr. 44
88299 Leutkirch, Germany

Tel.: +49 (0) 7561 970-0
Fax: +49 (0) 7561 970-100



IMAGE 2/2

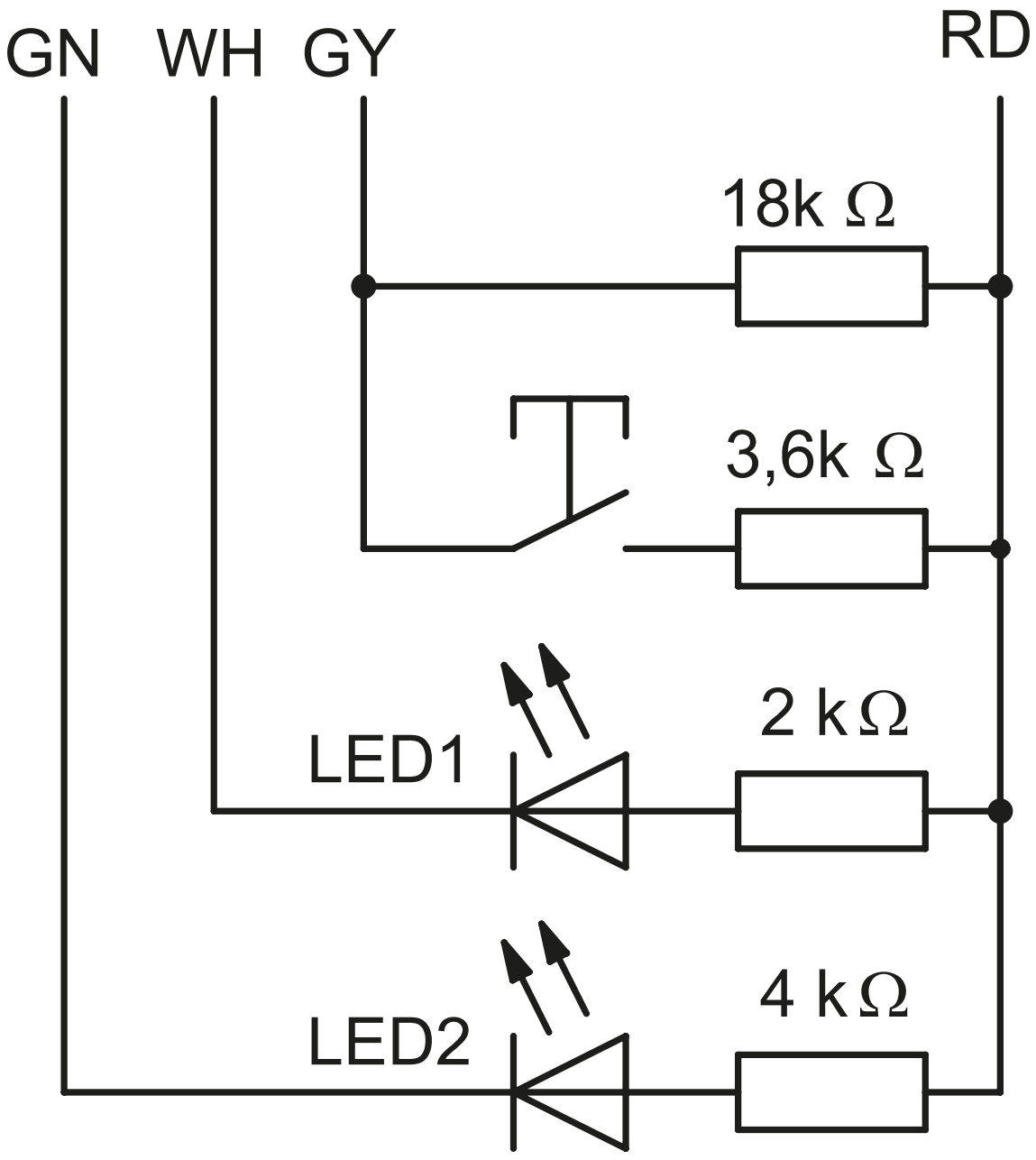


LED1 function illumination

LED2 night illumination

**elobau GmbH & Co. KG**
Zeppelinstr. 44
88299 Leutkirch, Germany

Tel.: +49 (0) 7561 970-0
Fax: +49 (0) 7561 970-100



## Product options

IMAGE 1/2

### Actuator colors

- RAL 9004
- RAL 3020
- White
- RAL 2009
- RAL 6024
- RAL 5005
- Yellow
- RAL 7042

### Night and function illumination

- Green
- White
- Blue

IMAGE 2/2

### Icons for push button 145 MR/MG

Icon colour: translucent

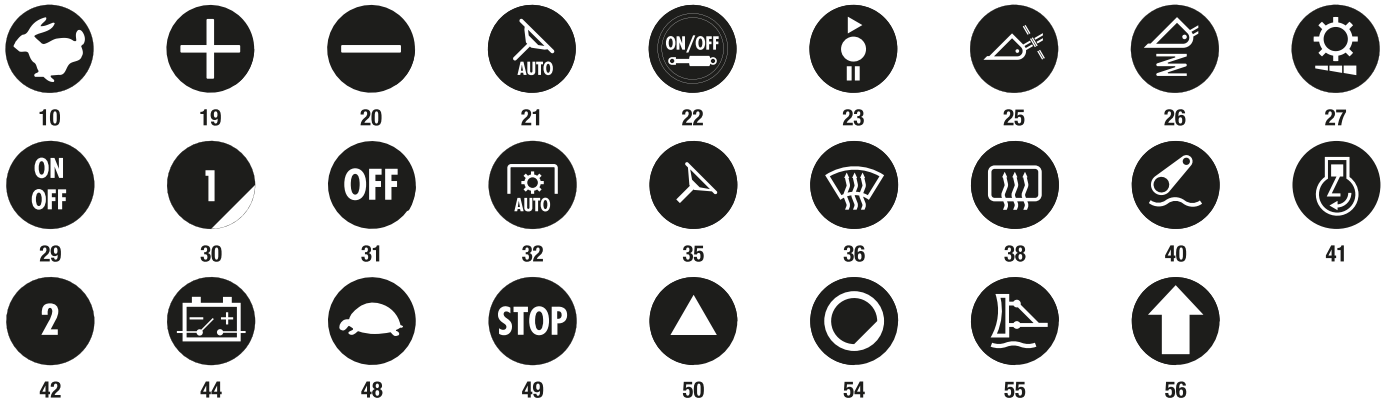


10 19 20 21 22 23 25 26 27
29 30 31 32 35 36 38 40 41
42 44 48 49 50 54 55 56

Icon colour: black




06 07 08 09 11 12

Additional versions are available on request. The push button caps can optionally be printed with symbols.

Additional symbols in accordance with DIN ISO 7000:2008-12 are available on request.

**elobau GmbH & Co. KG**
Zeppelinstr. 44
88299 Leutkirch, Germany

Tel.: +49 (0) 7561 970-0
Fax: +49 (0) 7561 970-100



## Article characteristics

| Attribute | 145MR... | 145MG... |
|---|---|---|
| **Max. switching voltage** | 24 V DC | |
| **Max. switching current** | 0.1 A | |
| **Max. switching power** | 1 VA | |
| **Max. switching power** | 1 W | |
| **Service life, mechanical (Cycles)** | 2000000 | |
| **Protection class, electronic** | IP67 DIN EN 60529 | |
| **Operating temperature min.** | -40 °C | |
| **Max. operating temperature** | 85 °C | |
| **Min. storage temperature** | -40 °C | |
| **Max. storage temperature** | 85 °C | |
| **Installation** | from above | |
| **Mounting type** | Latching detent | screwed |
| **Thread** | - | M12 |
| **Cable length** | 0.5 m | |