elobau GmbH & Co. KG
Zeppelinstr. 44
88299 Leutkirch, Germany

Tel.: +49 (0) 7561 970-0
Fax: +49 (0) 7561 970-100



Push button switch 145...AB

This robust push button with Superseal connector is designed for applications that are exposed to adverse environmental conditions. The M30 push button switch is ideally suited for use in the automotive engineering sector, for example, for controlling hydraulic functions. The switching element, which is completely separated from the mechanics, resists dust, dirt and moisture, thanks to its IP67 protection class.

Technical specifications

- Long service life thanks to the magnetic actuation principle
- Wear-free reed contacts for low switching currents
- Developed for harsh operating conditions with internal electronics sealed to IP67 protection class
- Available with various button colours and symbols to suit the application
- Various connector types available for a wide range of uses

elobau GmbH & Co. KG
Zeppelinstr. 44
88299 Leutkirch, Germany

Tel.: +49 (0) 7561 970-0
Fax: +49 (0) 7561 970-100

Technical drawing

IMAGE 1/2

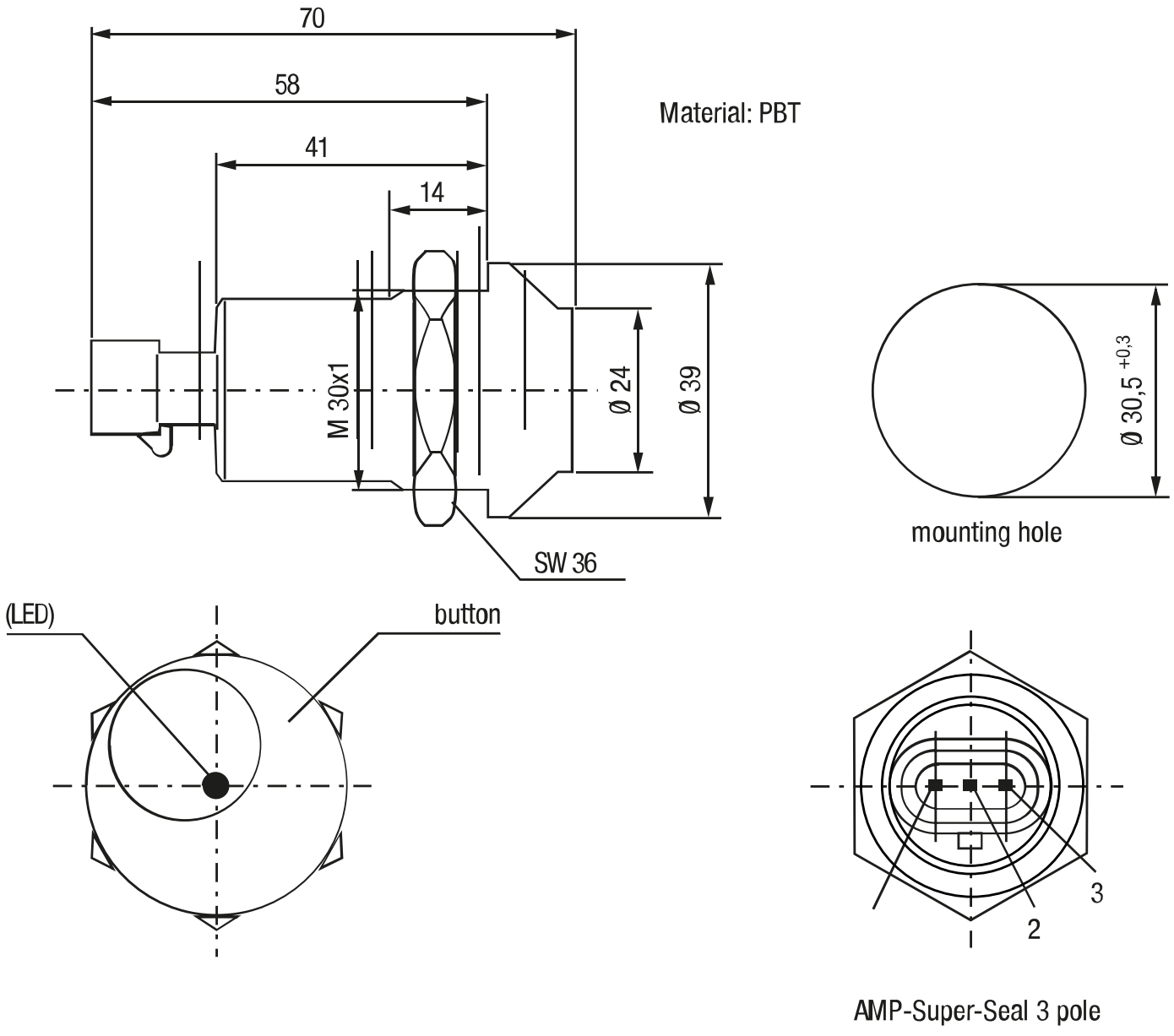

elobau GmbH & Co. KG
Zeppelinstr. 44
88299 Leutkirch, Germany

Tel.: +49 (0) 7561 970-0
Fax: +49 (0) 7561 970-100

IMAGE 2/2

Standard

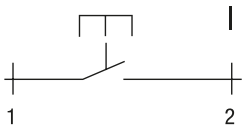

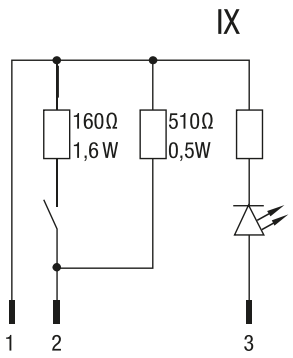

Optional

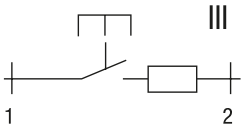

Other circuitry available on request.

elobau GmbH & Co. KG
Zeppelinstr. 44
88299 Leutkirch, Germany

Tel.: +49 (0) 7561 970-0
Fax: +49 (0) 7561 970-100

Product options

IMAGE 1/2

Actuator colors Standard
RAL 1018
RAL 3000
RAL 6017
Black

Illumination colours LED Standard
Red

Actuator colors Optional
RAL 2003
RAL 5019

Illumination colours LED Optional
Green
Blue
Yellow
White

Optional icons for push button 145 ... AB

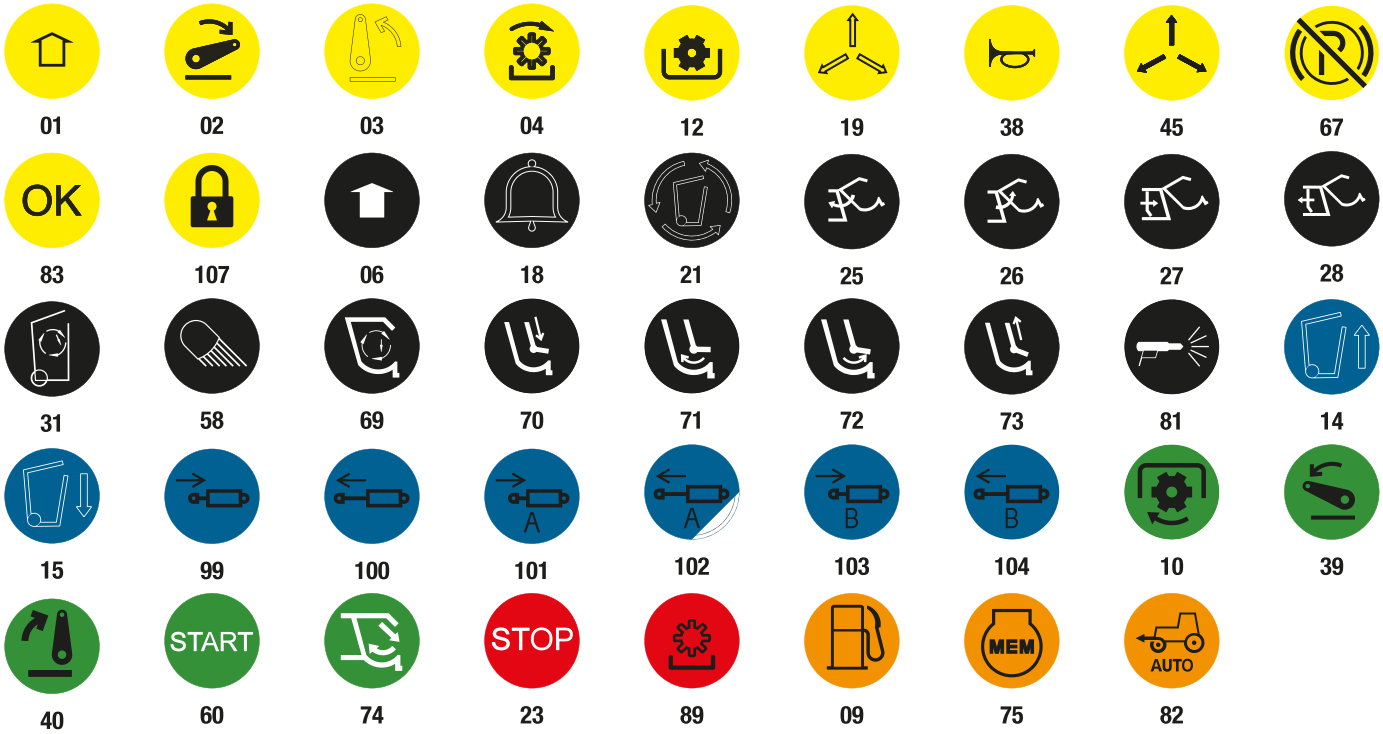

Additional icons according to DIN ISO 7000:2008-12 available on request.

elobau GmbH & Co. KG
Zeppelinstr. 44
88299 Leutkirch, Germany

Tel.: +49 (0) 7561 970-0
Fax: +49 (0) 7561 970-100

IMAGE 2/2

ORDERING KEY

145										Push buttons
										Circuit diagram
	0	0	0	A	B					Circuit I, N.O., with AMP Superseal connector
	1	0	5	A	B					Circuit IX, LED colour red, Namur with AMP Superseal connector
	0	0	0	A	E					Circuit I, N.O., with Deutsch connector
	1	0	5	A	E					Circuit IX, LED colour red, Namur with Deutsch connector
										Colour
						6	0			Black
						2	1			Yellow
						1	0			Green
						4	0			Red

SW36 nut included with delivery

elobau GmbH & Co. KG
Zeppelinstr. 44
88299 Leutkirch, Germany

Tel.: +49 (0) 7561 970-0
Fax: +49 (0) 7561 970-100

Article characteristics

Attribute	145...AB.
Max. switching voltage	36 V DC
Max. switching power	10 W
Max. switching power	10 VA
Service life, mechanical (Cycles)	2000000
Protection class, electronic	IP67 DIN EN 60529
Operating temperature min.	-20 °C
Max. operating temperature	100 °C
Min. storage temperature	-40 °C
Max. storage temperature	100 °C
Installation	from above
Mounting type	screwed
Connector type	AMP-Super-Seal