**elobau GmbH & Co. KG**
Zeppelinstr. 44
88299 Leutkirch, Germany

Tel.: +49 (0) 7561 970-0
Fax: +49 (0) 7561 970-100





# Actuation lever

Other variants available on request

## Product characteristics

- The actuating lever ideally complements the angle sensors, giving increased flexibility in connecting the angle sensor in your application
- The operating lever can be combined with almost all angle sensor variants of elobau

**elobau GmbH & Co. KG**
Zeppelinstr. 44
88299 Leutkirch, Germany

Tel.: +49 (0) 7561 970-0
Fax: +49 (0) 7561 970-100



## Technical drawing

IMAGE 1/4

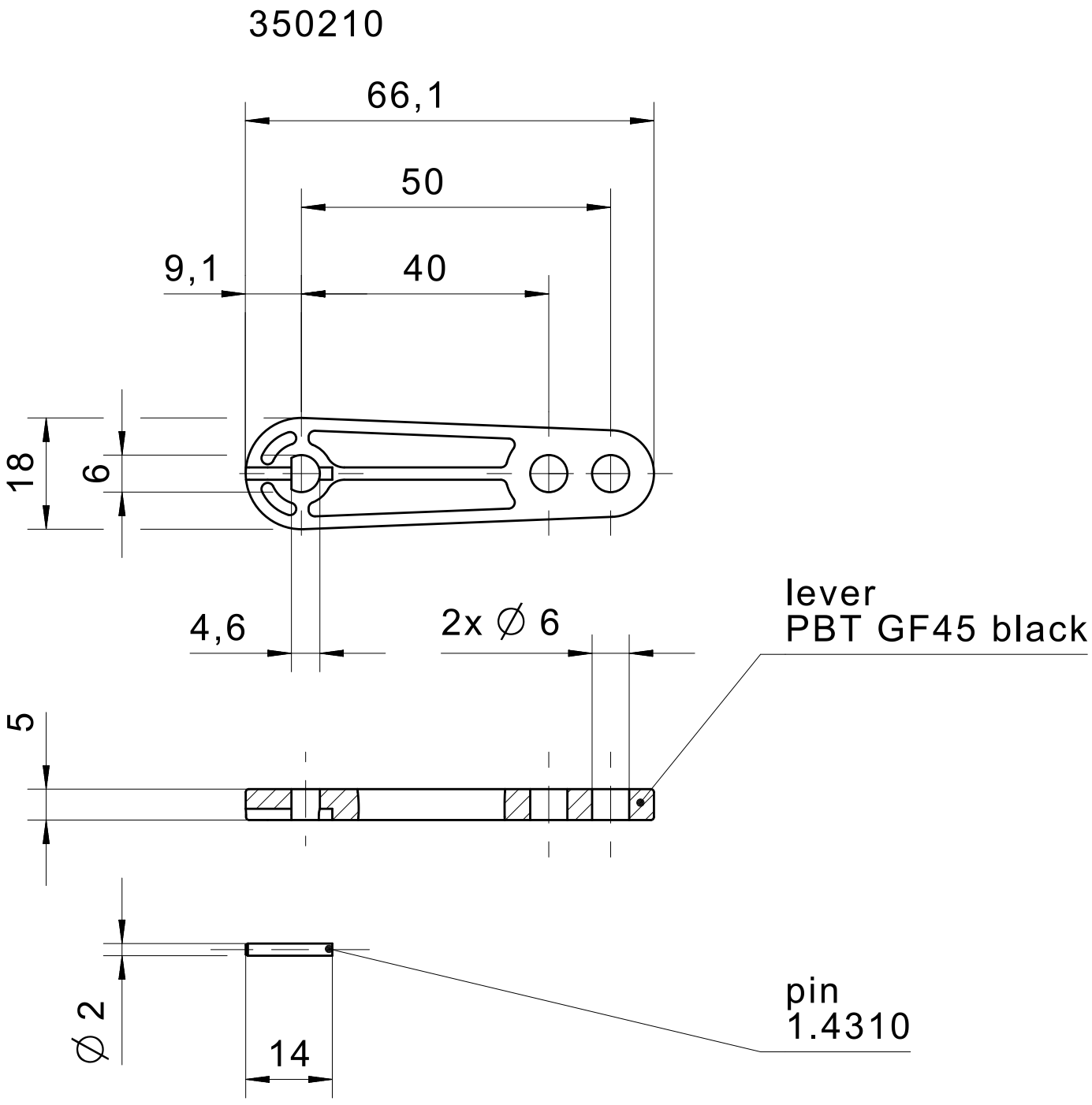

**elobau GmbH & Co. KG**
Zeppelinstr. 44
88299 Leutkirch, Germany

Tel.: +49 (0) 7561 970-0
Fax: +49 (0) 7561 970-100



IMAGE 2/4

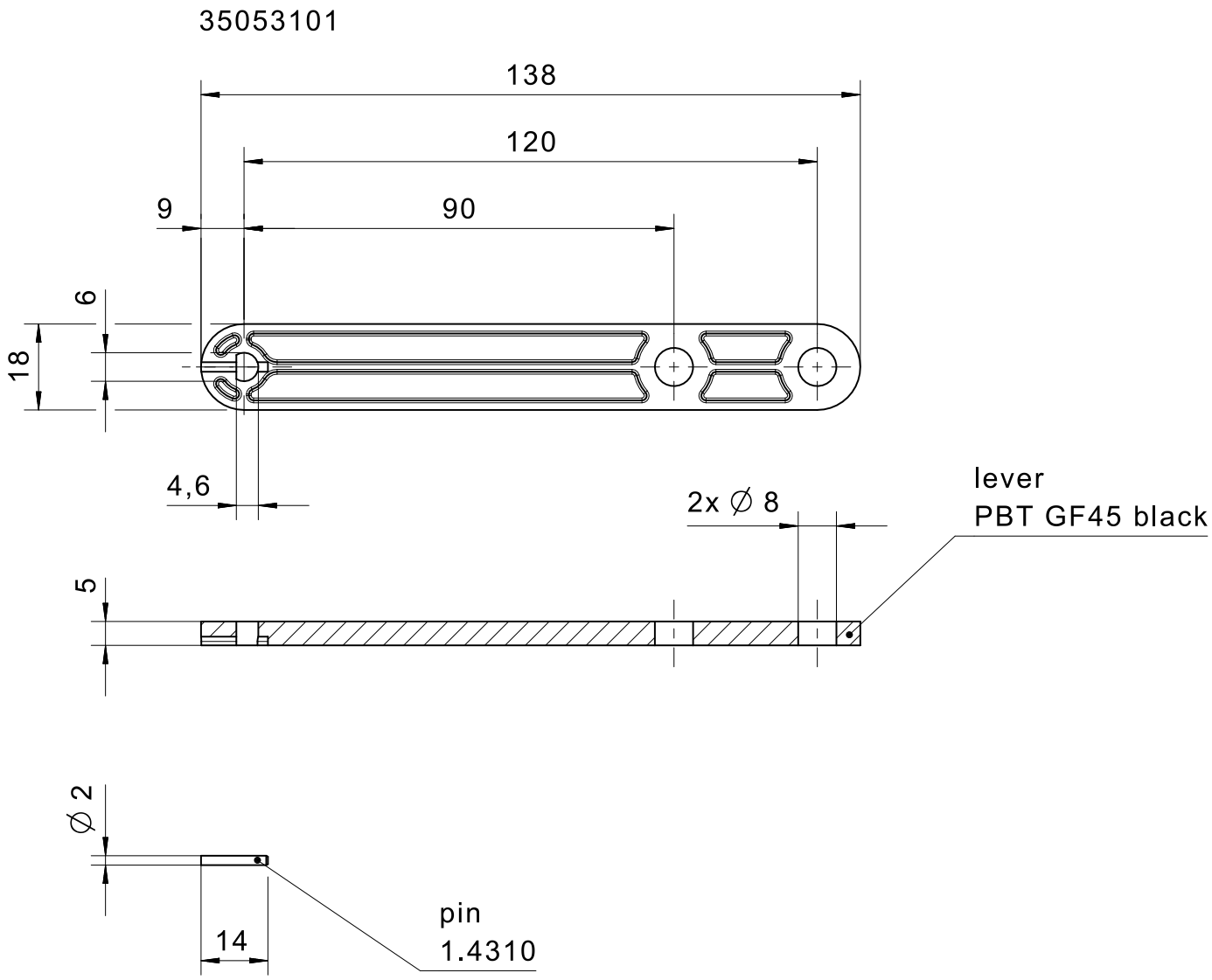

**elobau GmbH & Co. KG**
Zeppelinstr. 44
88299 Leutkirch, Germany

Tel.: +49 (0) 7561 970-0
Fax: +49 (0) 7561 970-100



IMAGE 3/4

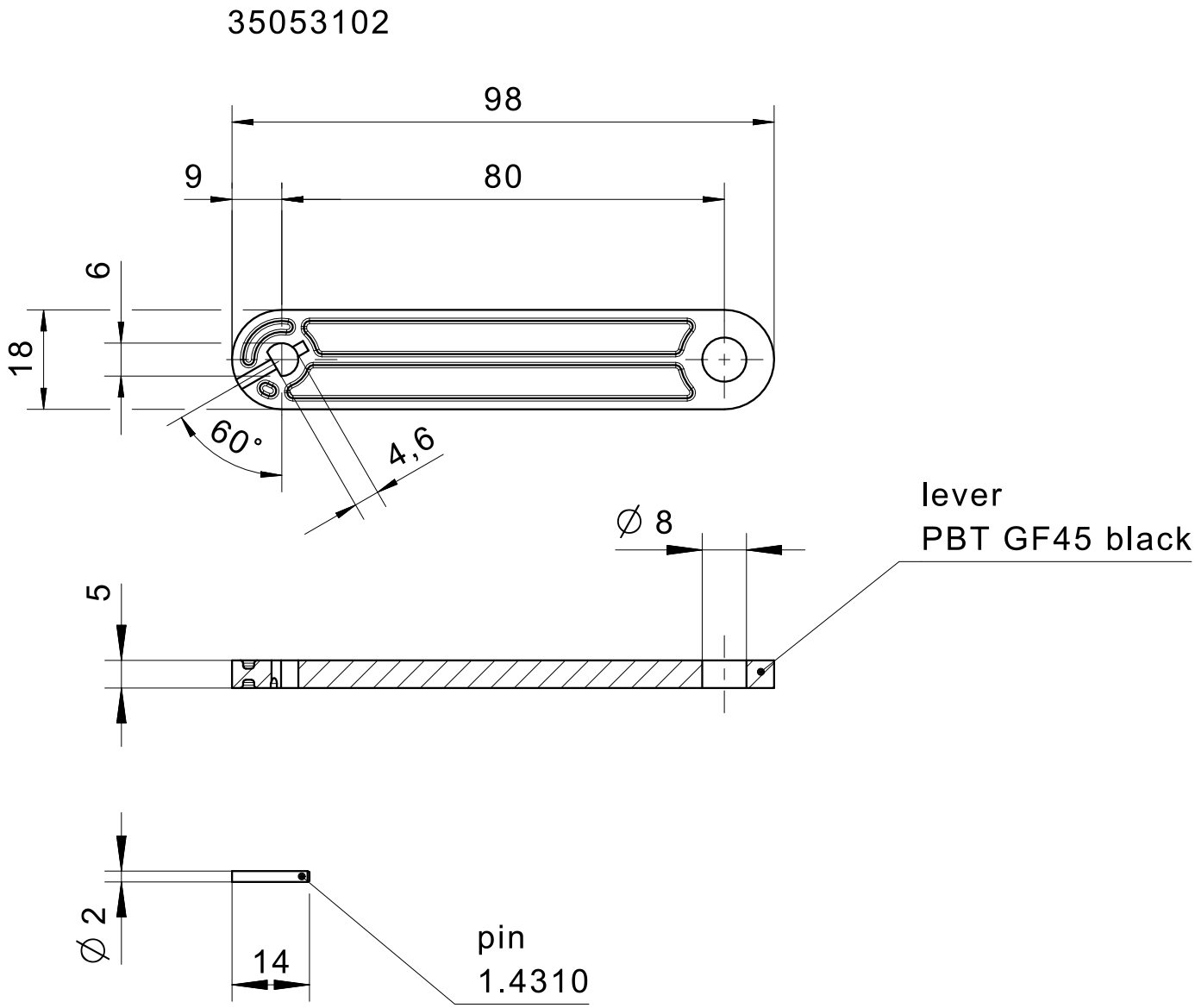

**elobau GmbH & Co. KG**
Zeppelinstr. 44
88299 Leutkirch, Germany

Tel.: +49 (0) 7561 970-0
Fax: +49 (0) 7561 970-100



IMAGE 4/4

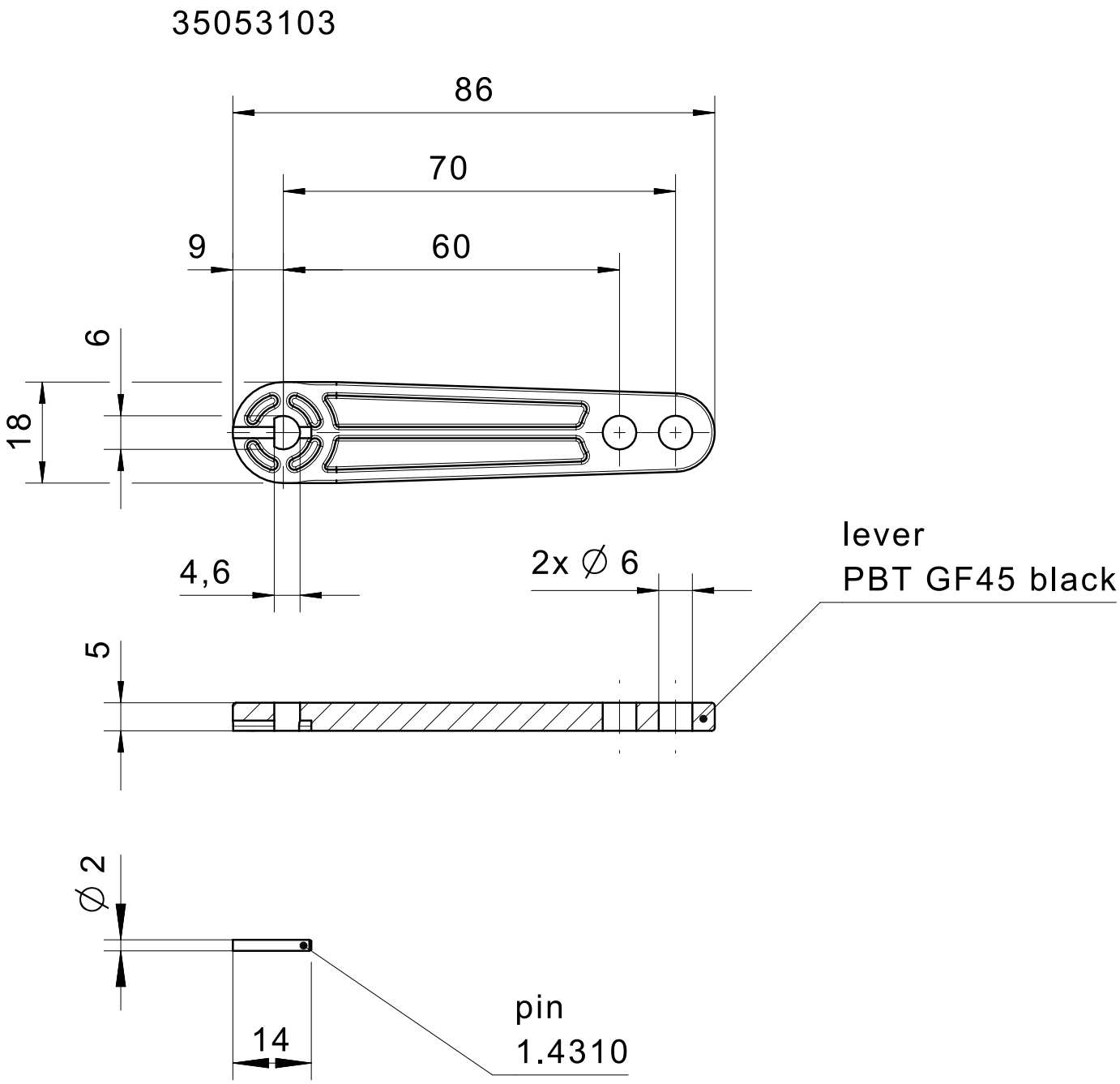

**elobau GmbH & Co. KG**
Zeppelinstr. 44
88299 Leutkirch, Germany

Tel.: +49 (0) 7561 970-0
Fax: +49 (0) 7561 970-100



## Article characteristics

| Attribute | 350210 | 35053101 | 35053102 | 35053103 |
|---|---|---|---|---|
| **Included with delivery** | 1x Actuation lever + 1x Dowel pin | | | |
| **Dimensions** | 66,1x18x5mm / Ø2x7mm | 138x18x5mm / Ø2x8mm | 98x18x5mm / Ø1x8mm | 86x18x5mm / Ø2x6mm |
| **Material** | PBT / 1.4310 | | | |
| **Mounting type** | Dowel pin | | | |