elobau GmbH & Co. KG
Zeppelinstr. 44
88299 Leutkirch, Germany

Tel.: +49 (0) 7561 970-0
Fax: +49 (0) 7561 970-100
info@elobau.de

Acoustic conduit

Product characteristics

- 90° sound deflection for complex installation conditions
- Suitable for sensors with M18 thread

Technical drawing
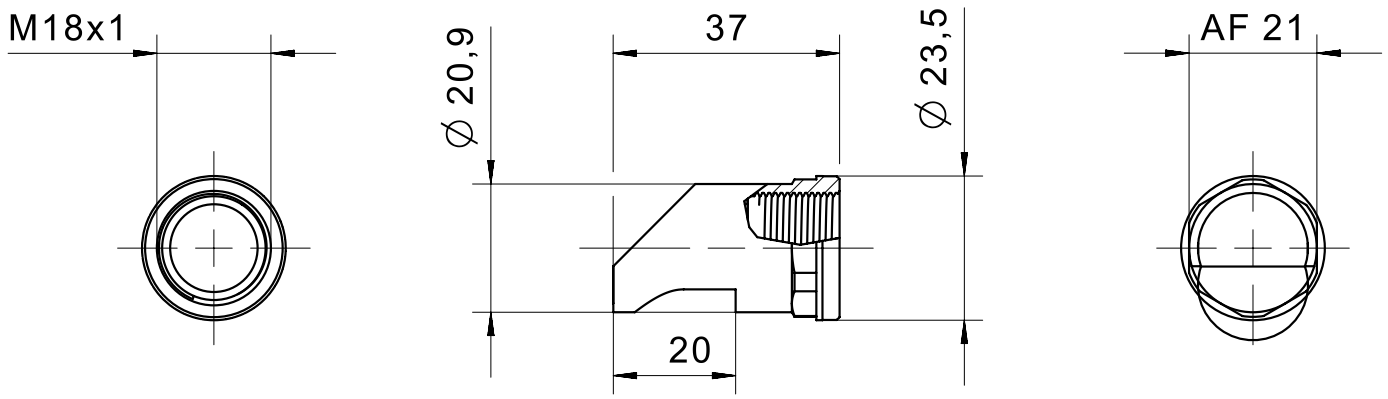
IMAGE 1/1