elobau GmbH & Co. KG
Zeppelinstr. 44
88299 Leutkirch, Germany

Tel.: +49 (0) 7561 970-0
Fax: +49 (0) 7561 970-100



Float switch 207KS

The float switch side mount 207KS with robust mechanical hinge is ideal for use in applications that require reliable monitoring under powerful flows. It is available with two different mounting options, so ideal for use in a range of applications and industries, eg the detection of fluid levels in water treatment containers, mechanical engineering and plant construction. The float switch also has a specially designed compression grommet which allows it to be installed from the outside. The switching function is reversible by simply rotating the float switch, making this a highly flexible and cost-effective solution.

Product characteristics

- Level measurement on reed-contact basis
- Mechanical hinge allows use in powerful flows
- Material: PP or PA12
- Mounting options: NPT thread or compression grommet
- Available connection types: cable outlet, M12 connector or pigtail
- Contact form: N.O., N.C. or changeover
- Temperature range from -25 °C to +105 °C
- Switching voltage up to max. 250V
- IP67 protection class

elobau GmbH & Co. KG
Zeppelinstr. 44
88299 Leutkirch, Germany

Tel.: +49 (0) 7561 970-0
Fax: +49 (0) 7561 970-100

Technical drawing

IMAGE 1/12

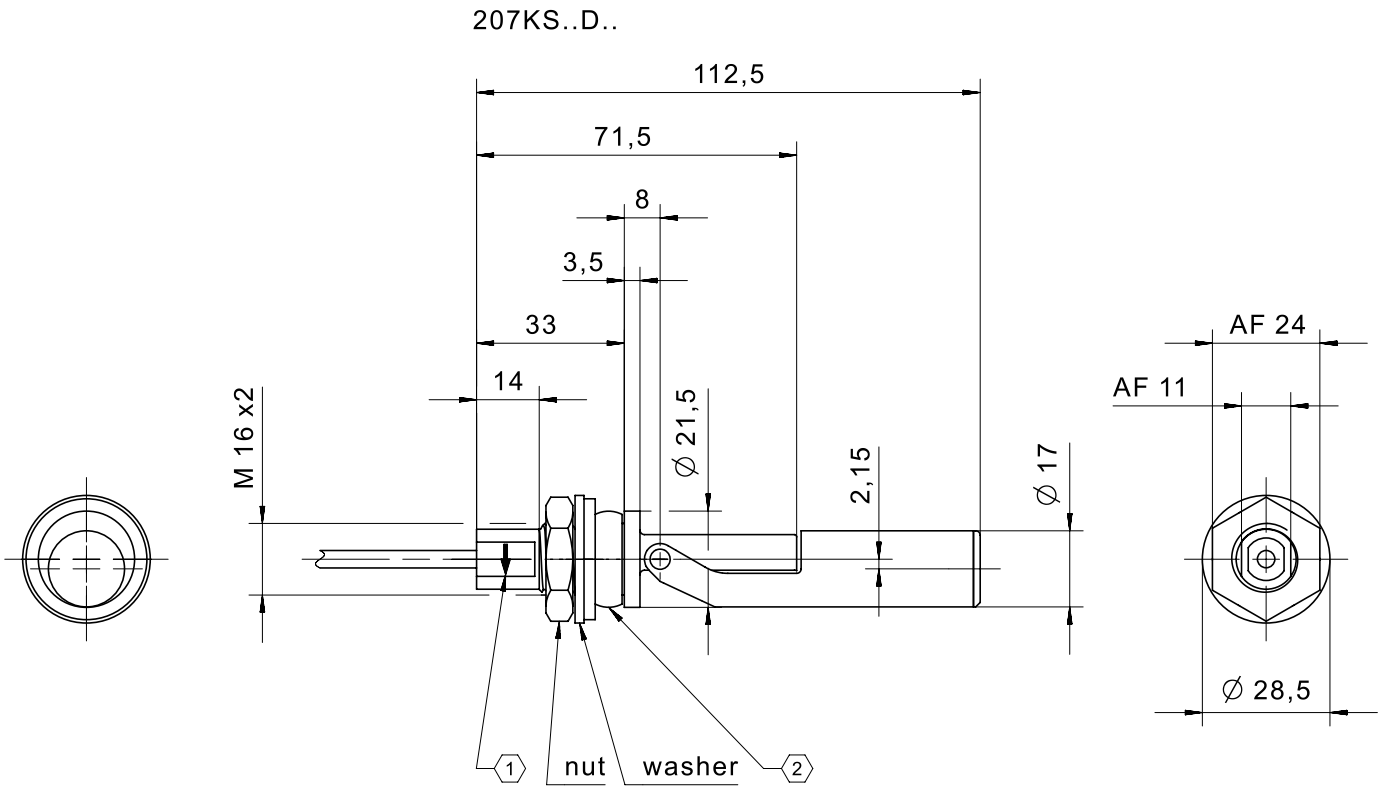

1 marking for mounting position

2 compression grommet for maximum wall thickness 3 and hole ∅22 till ∅23

elobau GmbH & Co. KG
Zeppelinstr. 44
88299 Leutkirch, Germany

Tel.: +49 (0) 7561 970-0
Fax: +49 (0) 7561 970-100

IMAGE 2/12

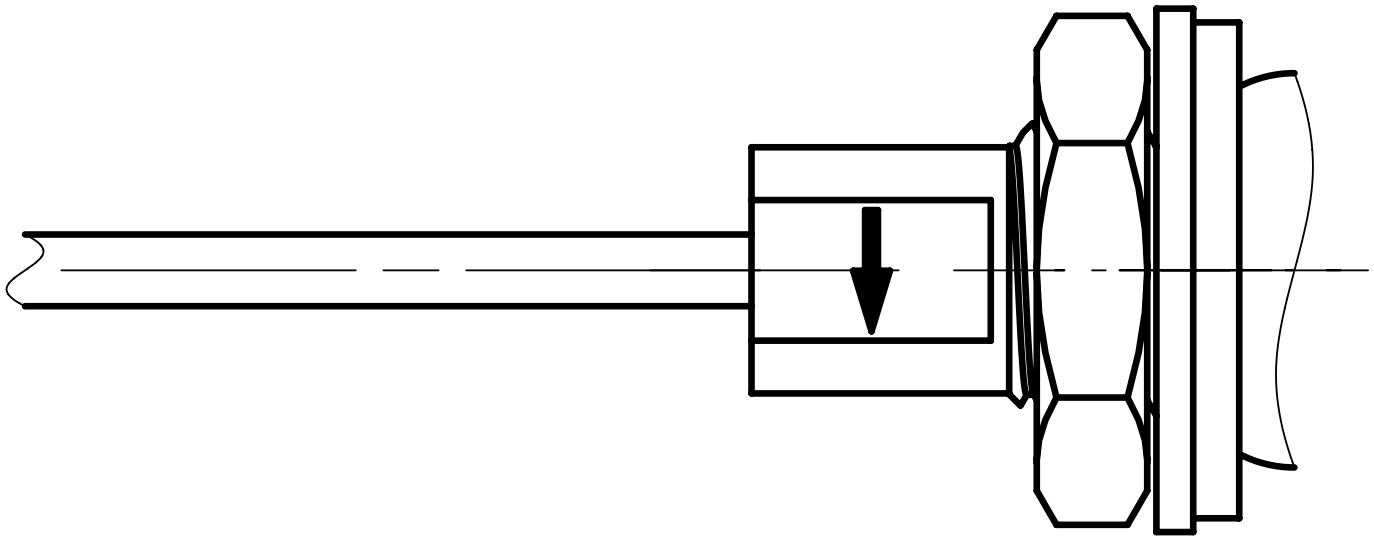

IMAGE 3/12

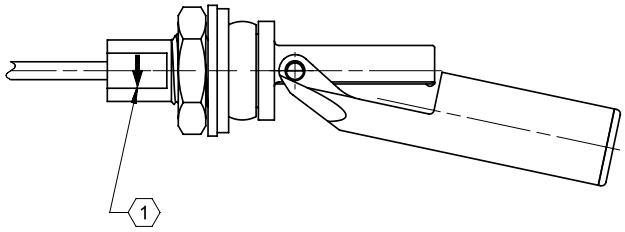

207KS0.D.....
207KS1.D.....

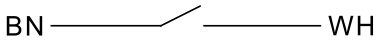

207KS2.D.....

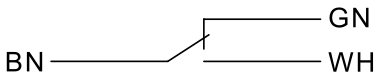

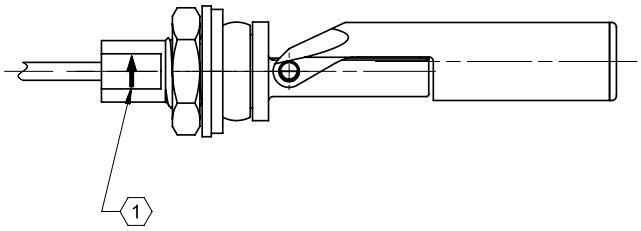

207KS0.D.....
207KS1.D.....

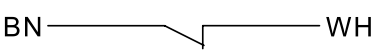

207KS2.D.....

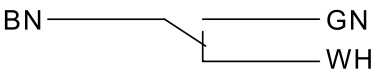

elobau GmbH & Co. KG
Zeppelinstr. 44
88299 Leutkirch, Germany

Tel.: +49 (0) 7561 970-0
Fax: +49 (0) 7561 970-100

IMAGE 4/12

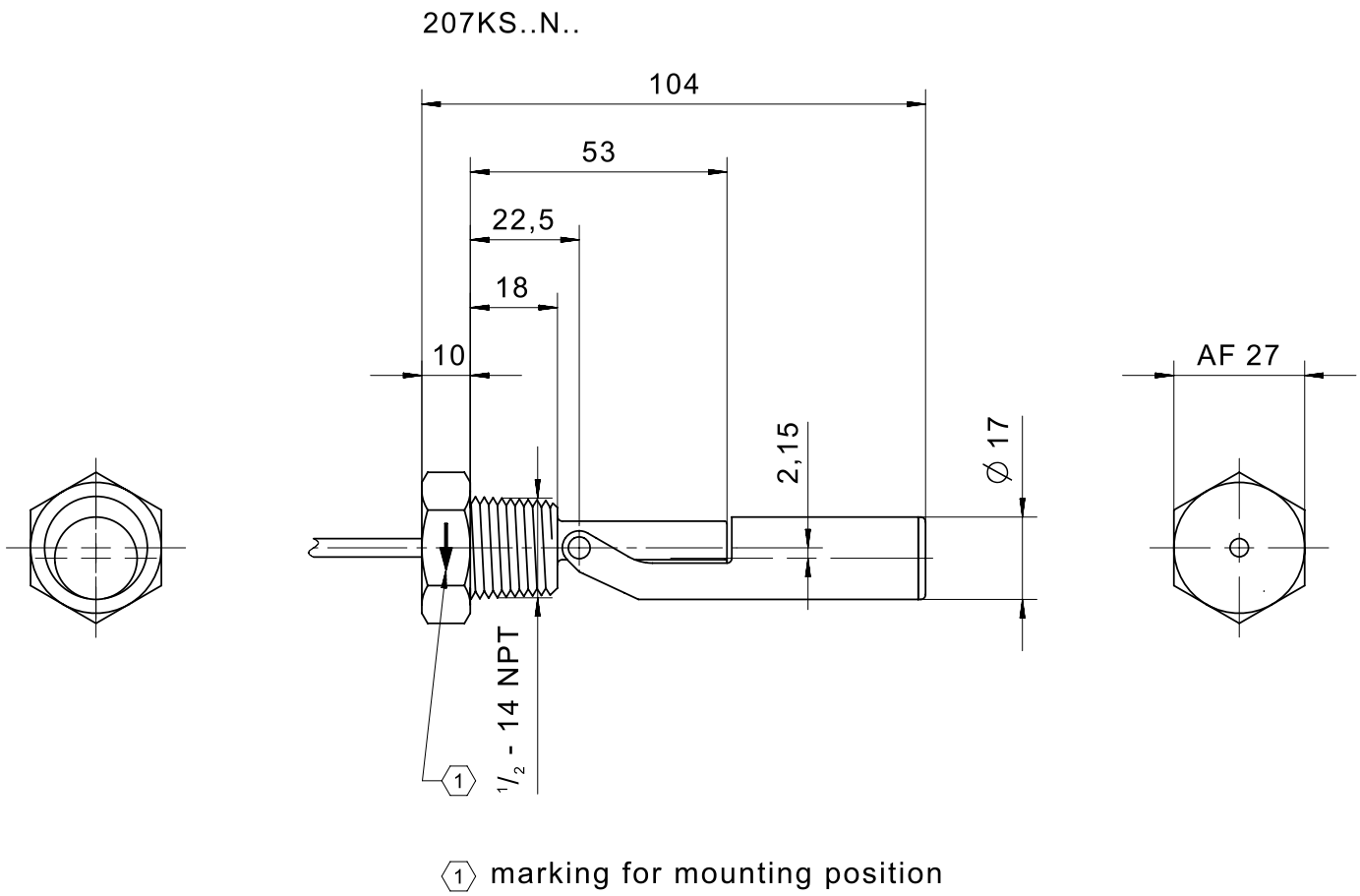

1 marking for mounting position

IMAGE 5/12

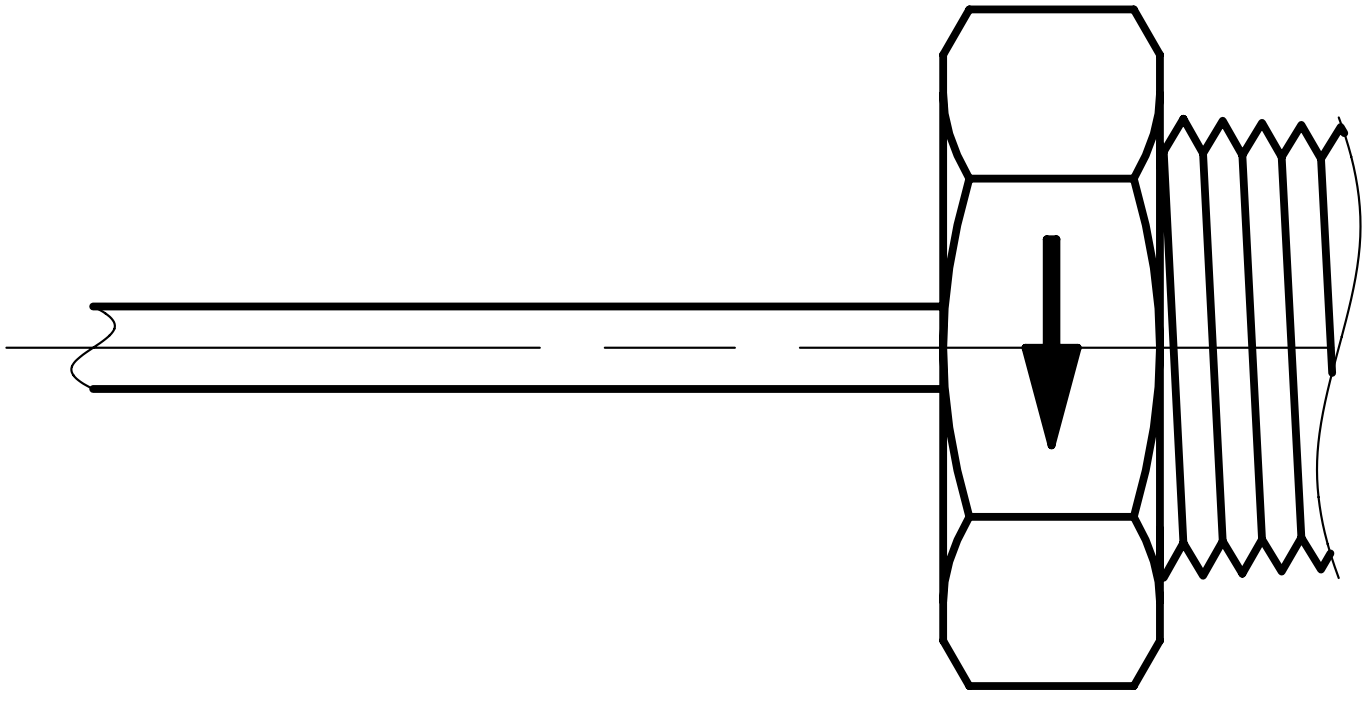

elobau GmbH & Co. KG
Zeppelinstr. 44
88299 Leutkirch, Germany

Tel.: +49 (0) 7561 970-0
Fax: +49 (0) 7561 970-100

IMAGE 6/12

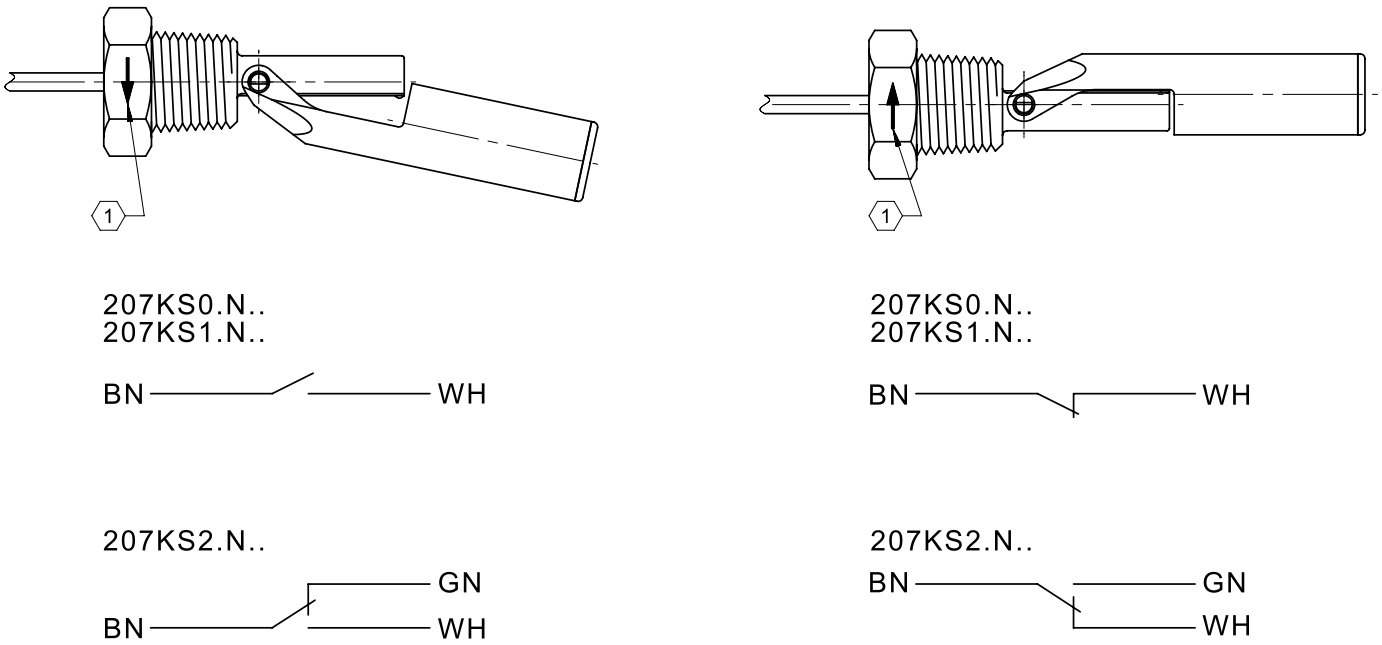

IMAGE 7/12

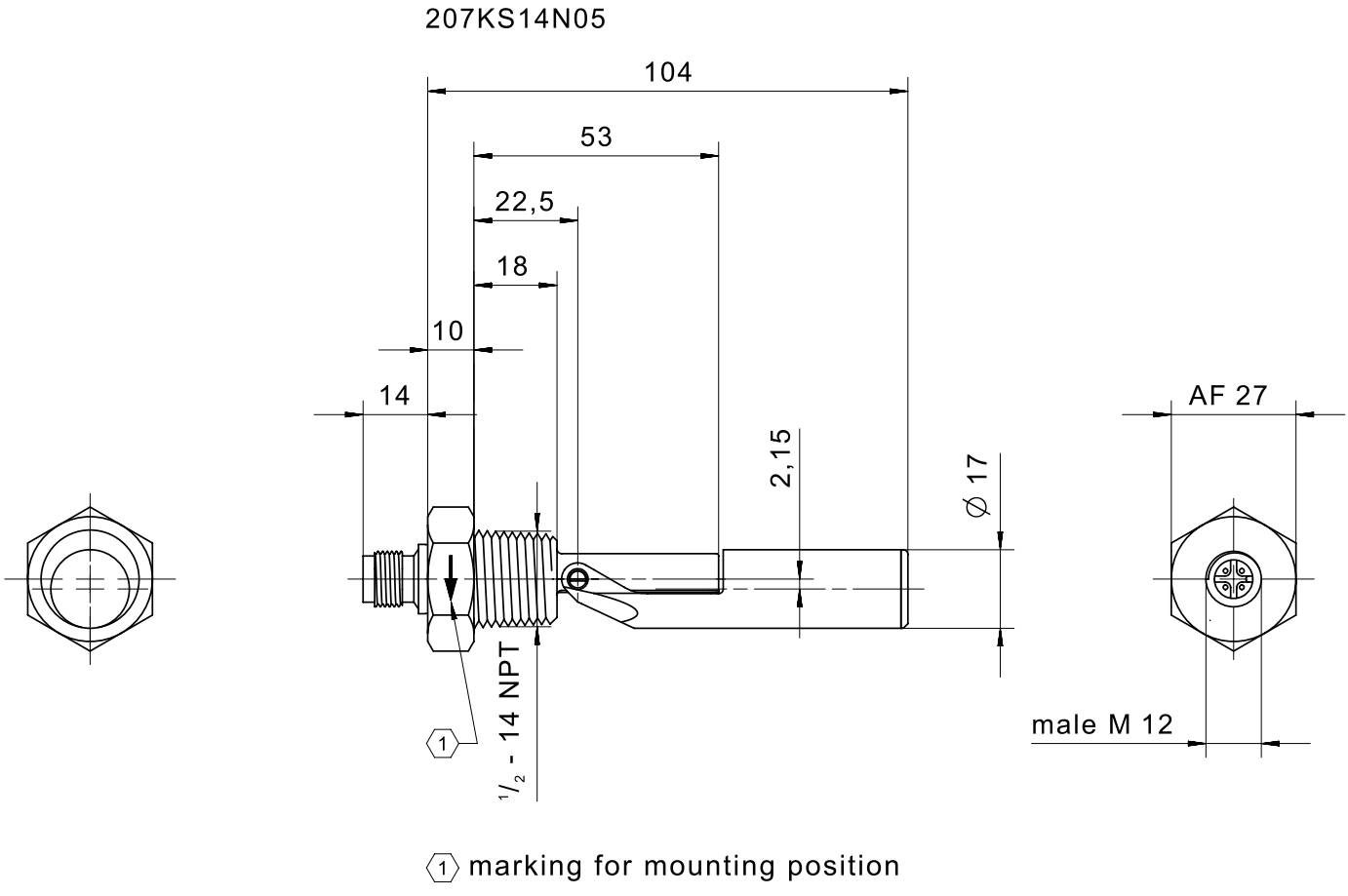

elobau GmbH & Co. KG
Zeppelinstr. 44
88299 Leutkirch, Germany

Tel.: +49 (0) 7561 970-0
Fax: +49 (0) 7561 970-100

IMAGE 8/12

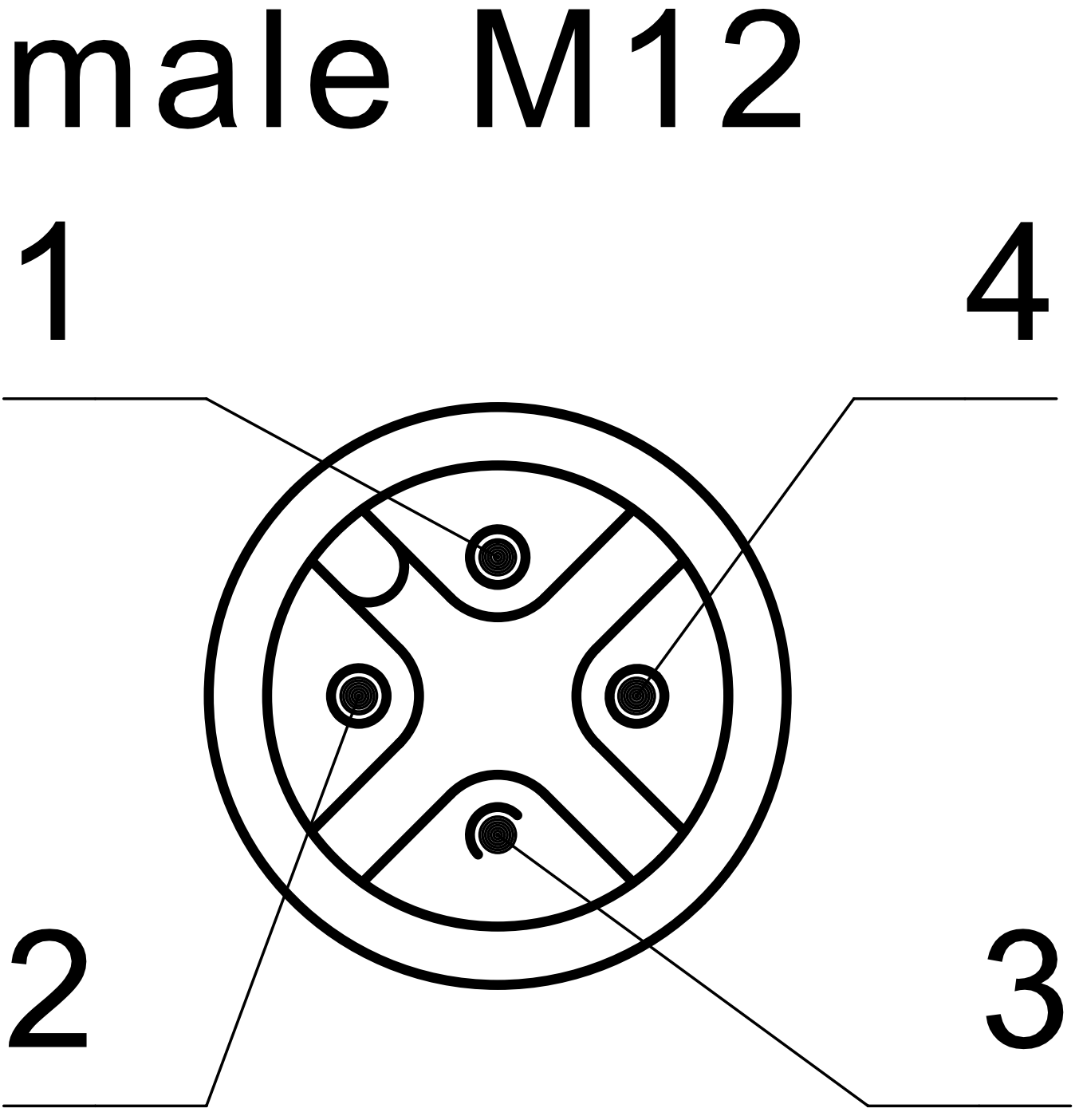

elobau GmbH & Co. KG
Zeppelinstr. 44
88299 Leutkirch, Germany

Tel.: +49 (0) 7561 970-0
Fax: +49 (0) 7561 970-100

IMAGE 9/12

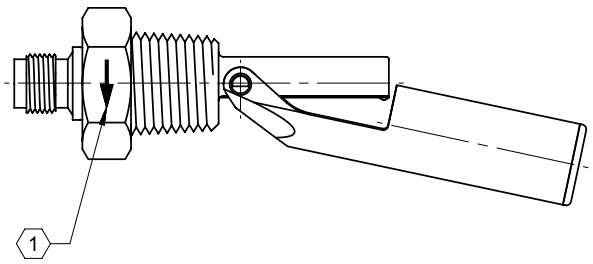

207KS14N05

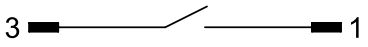

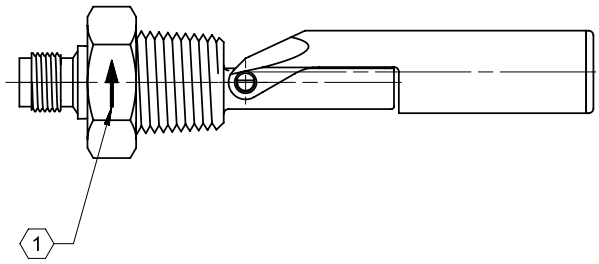

207KS14N05

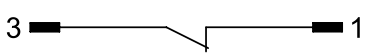

IMAGE 10/12

207KS..M..

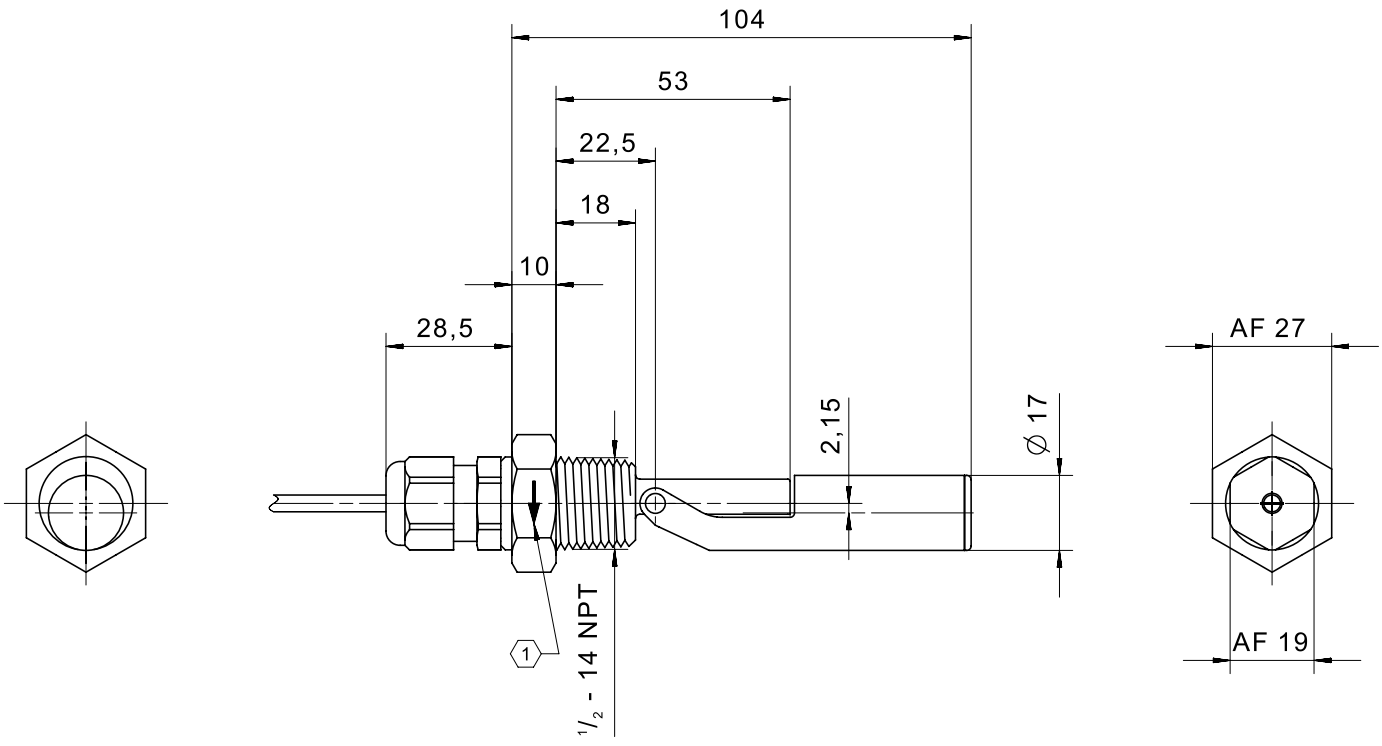

1 marking for mounting position

elobau GmbH & Co. KG
Zeppelinstr. 44
88299 Leutkirch, Germany

Tel.: +49 (0) 7561 970-0
Fax: +49 (0) 7561 970-100

IMAGE 11/12

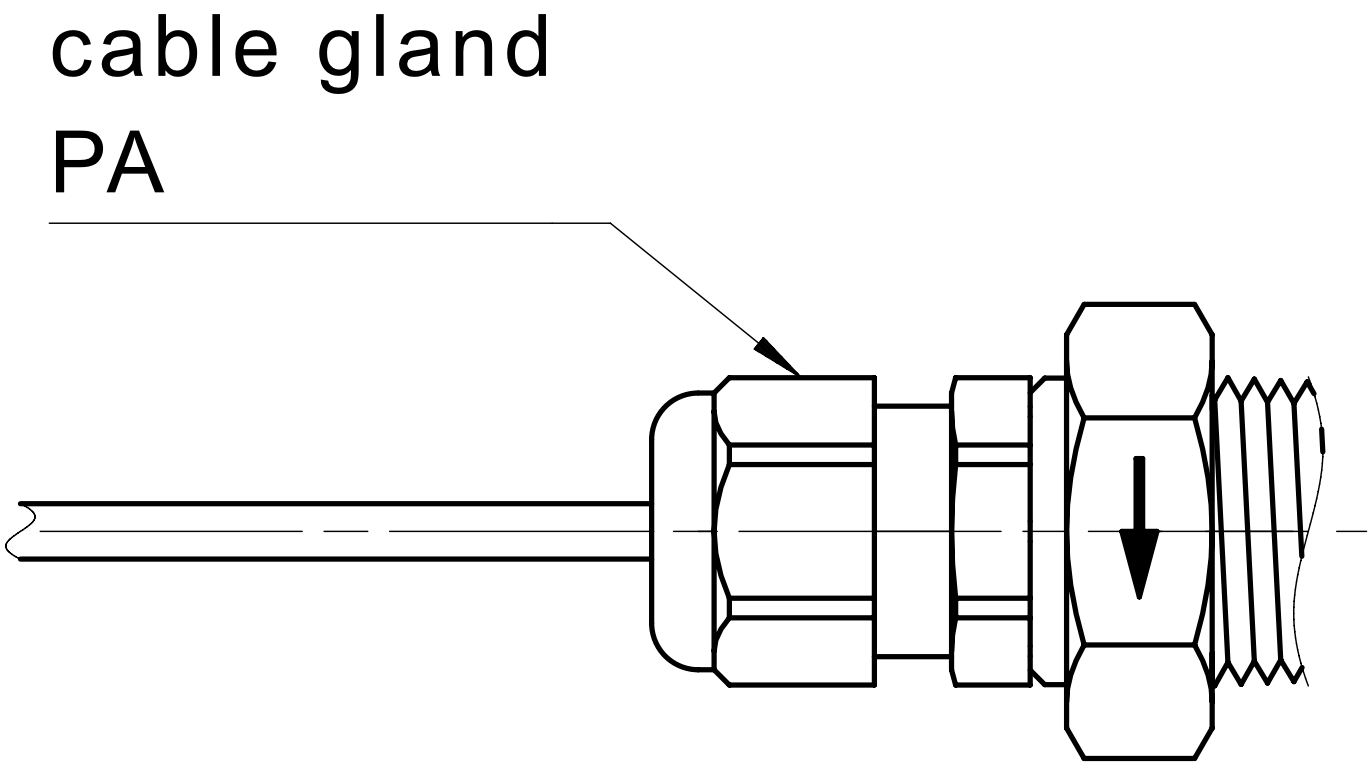

IMAGE 12/12

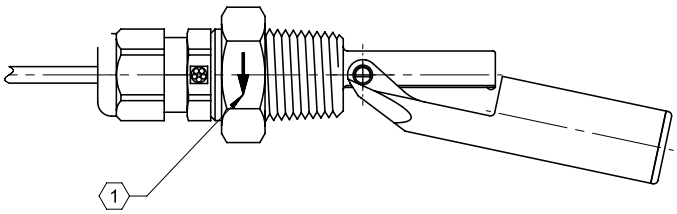

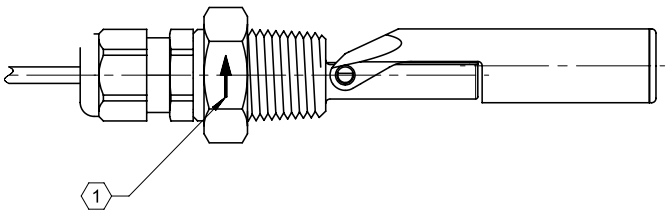

207KS0.M..
207KS1.M..

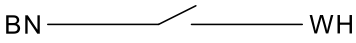

207KS0.M..
207KS1.M..

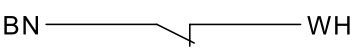

207KS2.M..

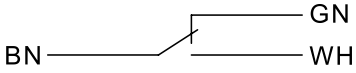

207KS2.M..

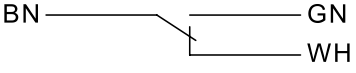

elobau GmbH & Co. KG
Zeppelinstr. 44
88299 Leutkirch, Germany

Tel.: +49 (0) 7561 970-0
Fax: +49 (0) 7561 970-100

Product options

IMAGE 1/1

ORDERING KEY

207KS					Float switch side mount, mechanical hinge
					Contact form
	1				N.O./N.C. max. 250V
	2				C.O. max. 48V
					Housing material
		2			PP
		4			PA12
					Connections
			D		Connection thread M16x2, cable connection 1m, compression grommet
			M		Connection thread NPT 1/2, cable connection 1m, IP68
			N		Connection thread NPT 1/2, cable connection 1m
					Other cable lengths*
				-3	Cable length 3m
				-5	Cable length 5m
				-10	Cable length 10m
Variant:					
207KS14N05					Connection thread NPT 1/2, M12 connector, material PA12, N.O./N.C.
207KS24N02					Connection thread NPT 1/2, M12 connector, material PA12, C.O.

Optional
More materials for housings, compression grommets, cable sheathing on request

elobau GmbH & Co. KG
Zeppelinstr. 44
88299 Leutkirch, Germany

Tel.: +49 (0) 7561 970-0
Fax: +49 (0) 7561 970-100

Article characteristics

Attribute	207KS12D	207KS12N	207KS14D	207KS14N	207KS14N05	207KS22D
Max. switching voltage	250 V DC					48 V DC
Max. switching voltage	250 V AC					48 V AC
Max. switching current	1 A					0.25 A
Max. switching power	50 W					3 W
Contact form	1A or 1B					1C
Output signal	digital					
Technology	Reed					
Float diameter	17 mm					
Version	Mechanical hinge					
Housing material	PP		PA12			PP
Float material	PP		PA12			PP
Cable material	PVC				-	PVC
Operating temperature min.	-25 °C					
Max. operating temperature	105 °C					
Pressure resistance	3 bar					
Protection class outside container	IP67 DIN EN 60529					
Protection class inside container	IP68 DIN EN 60529					
Mounting type	Compression grommet	Thread	Compression grommet	Thread		Compression grommet
Thread	–	G 1/2 - 14NPT	–	G 1/2 - 14NPT		–
Installation opening	D22-23	G 1/2 - 14NPT	D22-23	G 1/2 - 14NPT		D22-23
Connector type	-				M12	-
Cable length	1 m				–	1 m

elobau GmbH & Co. KG
Zeppelinstr. 44
88299 Leutkirch, Germany

Tel.: +49 (0) 7561 970-0
Fax: +49 (0) 7561 970-100

Attribute	207KS22N	207KS24D	207KS24N
Max. switching voltage	48 V DC		
Max. switching voltage	48 V AC		
Max. switching current	0.25 A		
Max. switching power	3 W		
Contact form	1C		
Output signal	digital		
Technology	Reed		
Float diameter	17 mm		
Version	Mechanical hinge		
Housing material	PP	PA12	
Float material	PP	PA12	
Cable material	PVC		
Operating temperature min.	-25 °C		
Max. operating temperature	105 °C		
Pressure resistance	3 bar		
Protection class outside container	IP67 DIN EN 60529		
Protection class inside container	IP68 DIN EN 60529		
Mounting type	Thread	Compression grommet	Thread
Thread	G 1/2 - 14NPT	–	G 1/2 - 14NPT
Installation opening	G 1/2 - 14NPT	D22-23	G 1/2 - 14NPT
Connector type	-		
Cable length	1 m		