elobau GmbH & Co. KG
Zeppelinstr. 44
88299 Leutkirch, Germany

Tel.: +49 (0) 7561 970-0
Fax: +49 (0) 7561 970-100



Float switch 205KS

The float switch side mount 205KS with Teflon hinge is ideal for use in media that has a tendency to clump or contains contaminants that need to be monitored. It is available with two different mounting options, so ideal for use in a range of applications and industries, eg the detection of fluid levels in water treatment containers, mechanical engineering and plant construction. The float switch also has a specially designed compression grommet which allows it to be installed from the outside. The switching function is reversible by simply rotating the float switch, making this a highly flexible and cost-effective solution.

Product characteristics

- Level detection on reed-contact basis
- Teflon hinge for use in high-viscosity or contaminated media
- Material: PP or PVDF
- Mounting options: G 1/2" thread or compression grommet
- Available connection types: cable outlet, M12 connector or pigtail
- Contact form: N.O., N.C. or changeover
- Temperature range from -25 °C to +105 °C
- Switching voltage up to max. 250V
- IP67 protection class

elobau GmbH & Co. KG
Zeppelinstr. 44
88299 Leutkirch, Germany

Tel.: +49 (0) 7561 970-0
Fax: +49 (0) 7561 970-100

Technical drawing

IMAGE 1/9

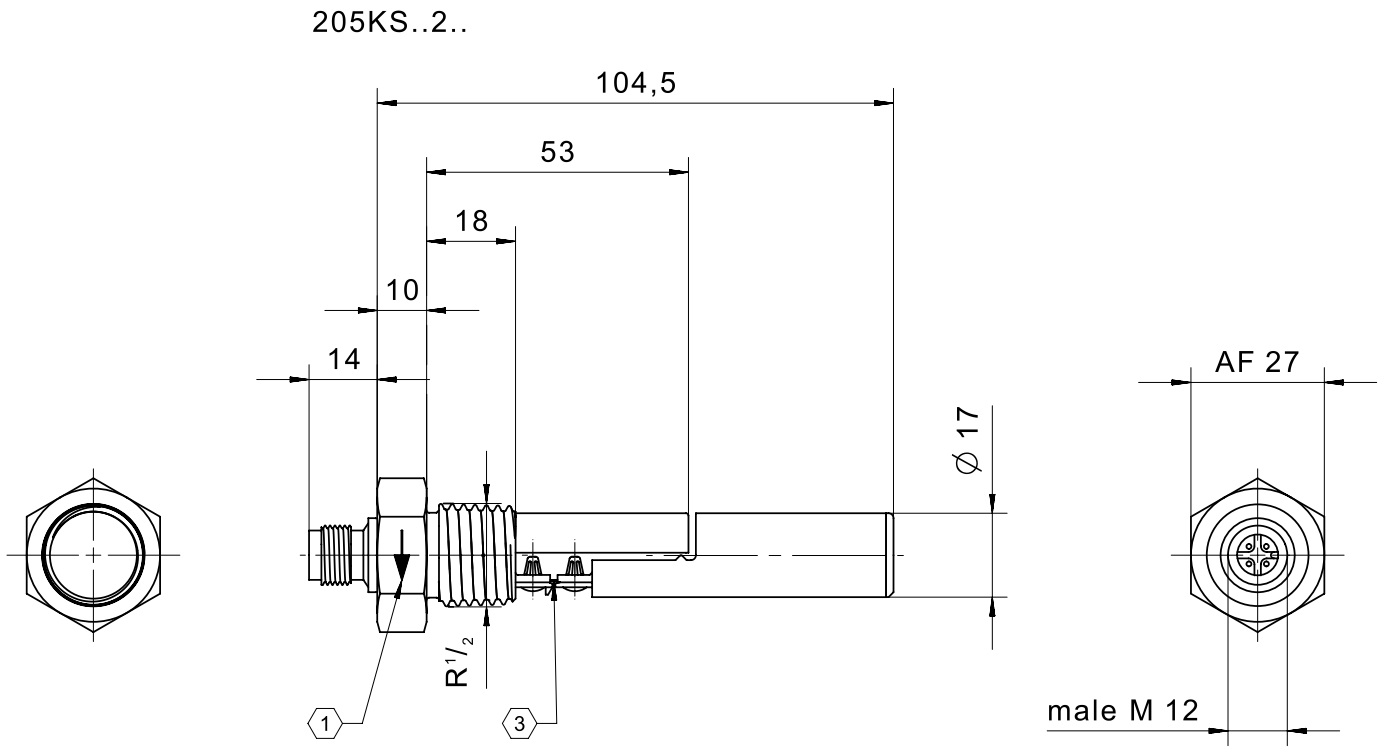

1 marking for mounting position

3 hinge made from PTFE

elobau GmbH & Co. KG
Zeppelinstr. 44
88299 Leutkirch, Germany

Tel.: +49 (0) 7561 970-0
Fax: +49 (0) 7561 970-100

IMAGE 2/9

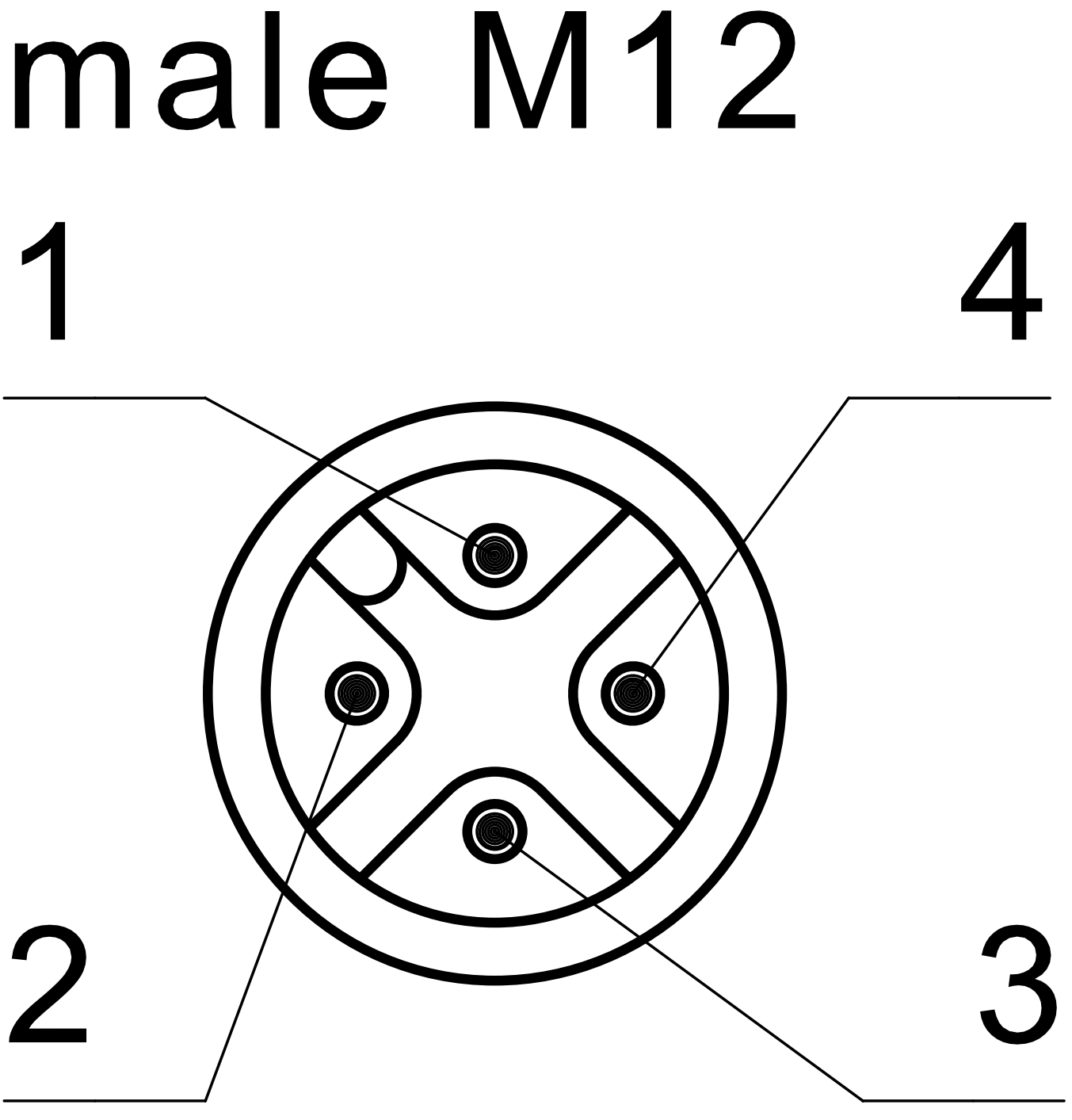

elobau GmbH & Co. KG
Zeppelinstr. 44
88299 Leutkirch, Germany

Tel.: +49 (0) 7561 970-0
Fax: +49 (0) 7561 970-100

IMAGE 3/9

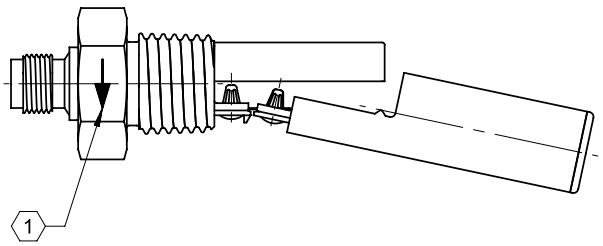

205KS0.2.....
205KS1.2.....

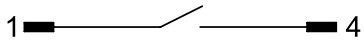

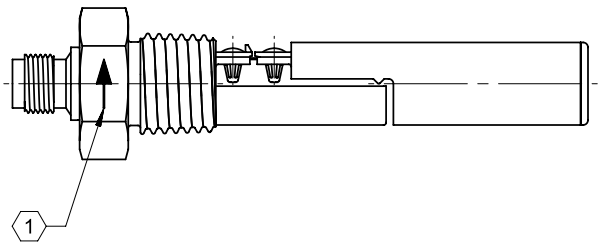

205KS0.2.....
205KS1.2.....

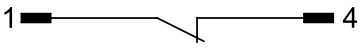

IMAGE 4/9

205KS..D..

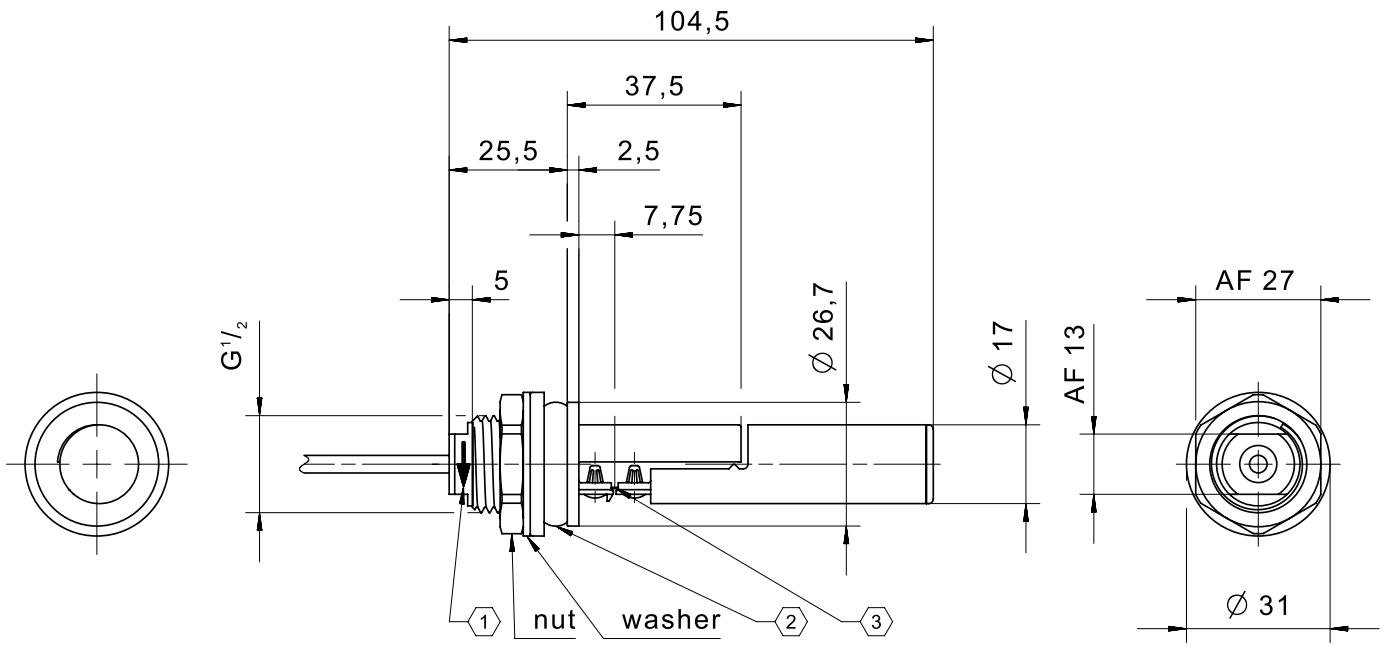

1 marking for mounting position

2 compression grommet for maximum wall thickness 3 and hole ∅27 till ∅28

3 hinge made from PTFE

elobau GmbH & Co. KG
Zeppelinstr. 44
88299 Leutkirch, Germany

Tel.: +49 (0) 7561 970-0
Fax: +49 (0) 7561 970-100

IMAGE 5/9

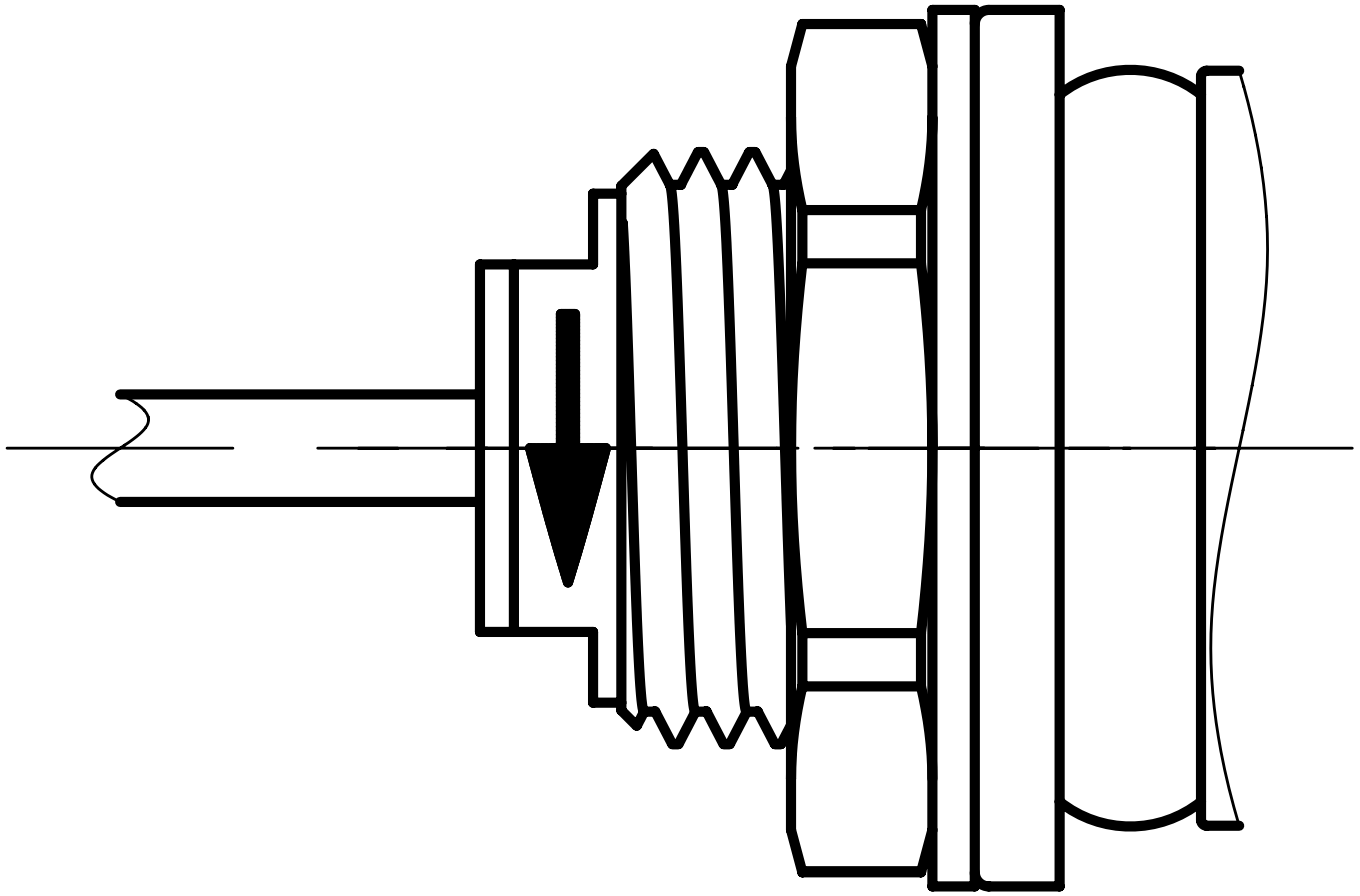

IMAGE 6/9

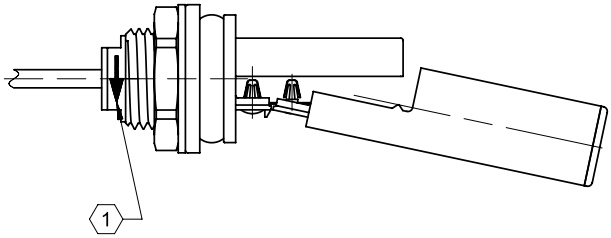

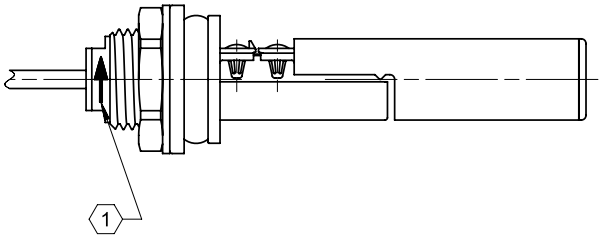

205KS0.D.....
205KS1.D.....

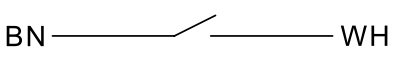

205KS2.D.....

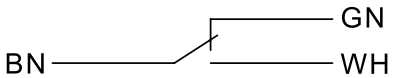

205KS0.D.....
205KS1.D.....

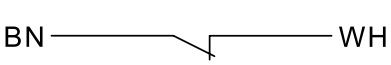

205KS2.D.....

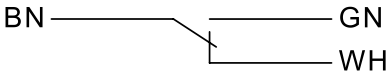

elobau GmbH & Co. KG
Zeppelinstr. 44
88299 Leutkirch, Germany

Tel.: +49 (0) 7561 970-0
Fax: +49 (0) 7561 970-100

IMAGE 7/9

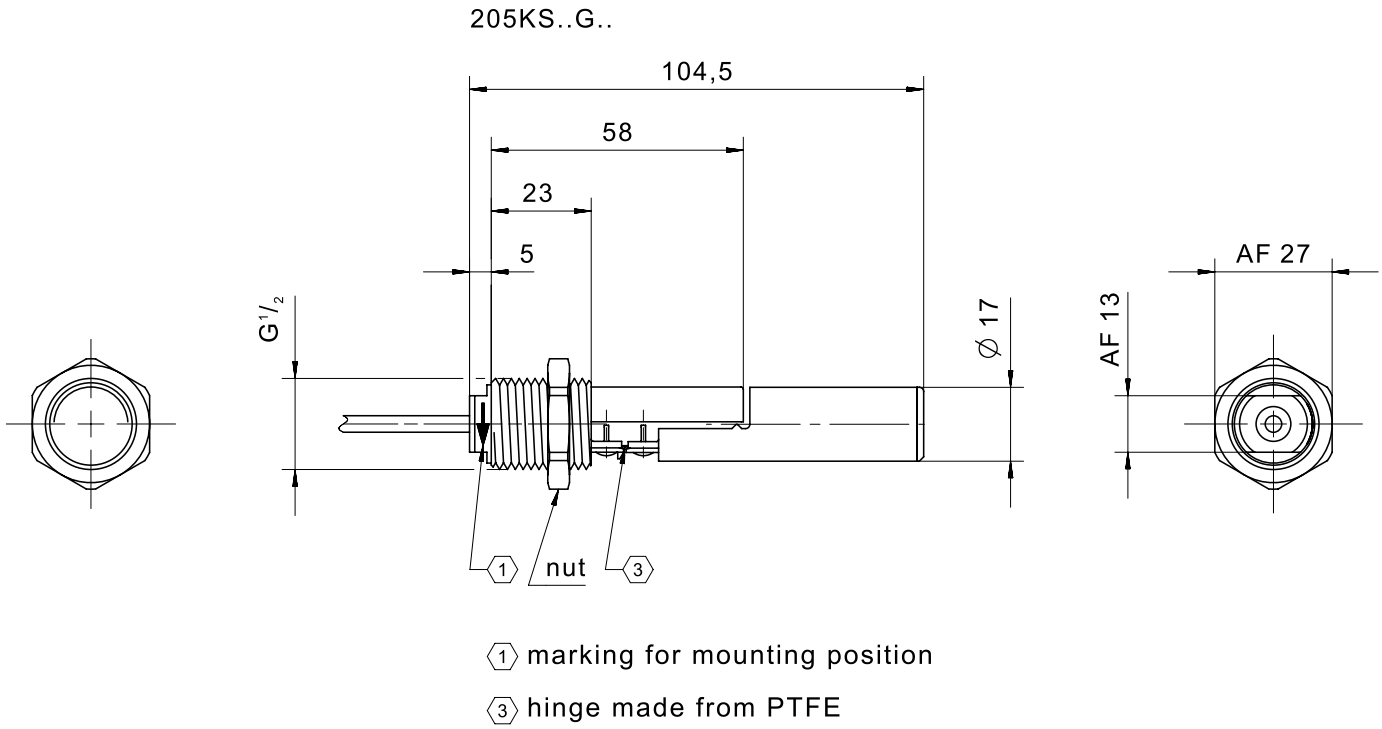

1 marking for mounting position

3 hinge made from PTFE

elobau GmbH & Co. KG
Zeppelinstr. 44
88299 Leutkirch, Germany

Tel.: +49 (0) 7561 970-0
Fax: +49 (0) 7561 970-100

IMAGE 8/9

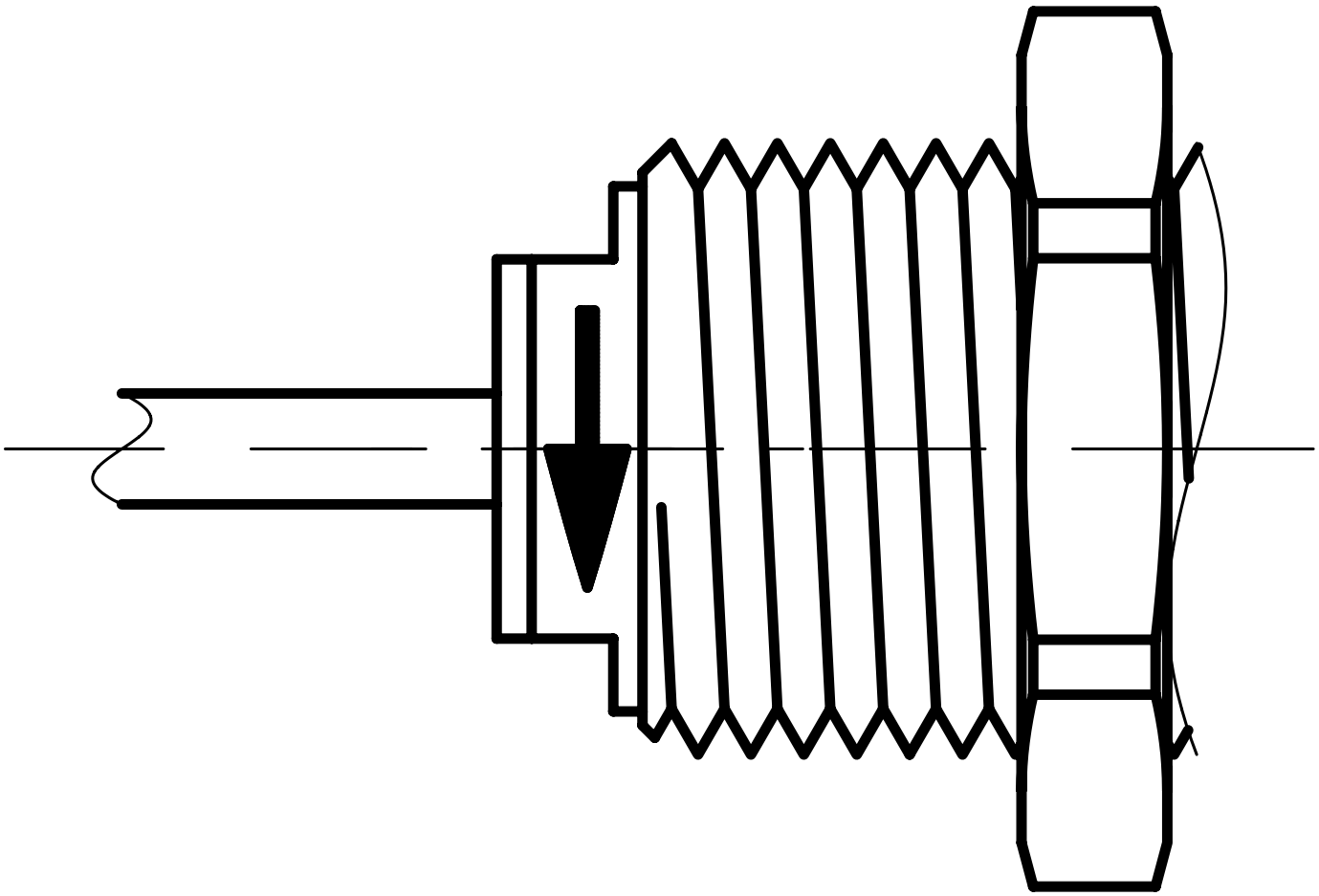

IMAGE 9/9

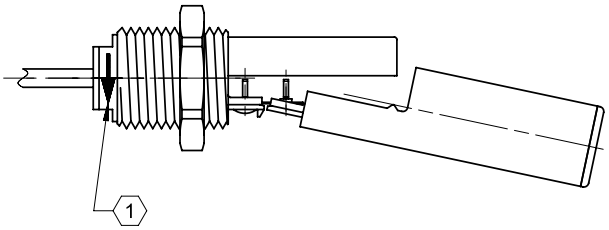

205KS0.G.....
205KS1.G.....

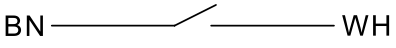

205KS2.G.....

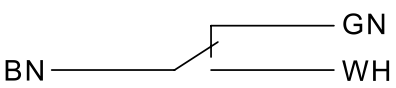

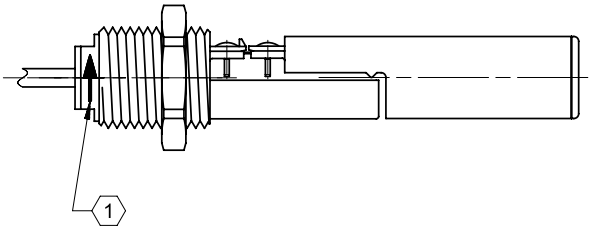

205KS0.G.....
205KS1.G.....

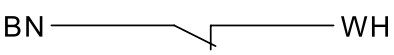

205KS2.G.....

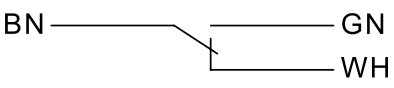

elobau GmbH & Co. KG
Zeppelinstr. 44
88299 Leutkirch, Germany

Tel.: +49 (0) 7561 970-0
Fax: +49 (0) 7561 970-100

Product options

IMAGE 1/1

ORDERING KEY

205KS					Float switch side mount, Teflon hinge	
					Contact form	
	1				N.O./N.C. max. 250V	
	2				C.O. max. 48V	
					Housing material	
		2			PP	
		3			PVDF*	* Only for connection 0
					Connections	
			0		Connection thread R1/2, PVC cable connection 1 m, limit stop	
			2		Connection thread R1/2, M12 connector*	* Only with material: PP
			D		Connection thread G1/2, PVC cable connection 1m, compression grommet	
			G		Connection thread G1/2, PVC cable connection 1 m	
					Other cable lengths*	* Only for connections 0, D and G
				-3	Cable length 3m	
				-5	Cable length 5m	
				-10	Cable length 10m	

Optional
More materials for housings, cable sheathing on request

elobau GmbH & Co. KG
Zeppelinstr. 44
88299 Leutkirch, Germany

Tel.: +49 (0) 7561 970-0
Fax: +49 (0) 7561 970-100

Article characteristics

Attribute	205KS12D	205KS12G	205KS120	205KS122	205KS22D	205KS22G
Max. switching voltage	250 V DC				48 V DC	
Max. switching voltage	250 V AC				48 V AC	
Max. switching current	1 A				0.25 A	
Max. switching power	50 W				3 W	
Contact form	1A or 1B				1C	
Output signal	digital					
Technology	Reed					
Float diameter	17 mm					
Version	Teflon hinge					
Housing material	PP					
Float material	PP					
Cable material	PVC			-	PVC	
Operating temperature min.	-25 °C					
Max. operating temperature	105 °C					
Pressure resistance	3 bar					
Protection class outside container	IP67 DIN EN 60529					
Protection class inside container	IP68 DIN EN 60529					
Mounting type	Thread					
Thread	G 1/2					
Installation opening	G1/2	G 1/2	G1/2	G 1/2	G1/2	
Connector type	-			M12	-	
Cable length	1 m			–	1 m	

elobau GmbH & Co. KG
Zeppelinstr. 44
88299 Leutkirch, Germany

Tel.: +49 (0) 7561 970-0
Fax: +49 (0) 7561 970-100

Attribute	205KS220
Max. switching voltage	48 V DC
Max. switching voltage	48 V AC
Max. switching current	0.25 A
Max. switching power	3 W
Contact form	1C
Output signal	digital
Technology	Reed
Float diameter	17 mm
Version	Teflon hinge
Housing material	PP
Float material	PP
Cable material	PVC
Operating temperature min.	-25 °C
Max. operating temperature	105 °C
Pressure resistance	3 bar
Protection class outside container	IP67 DIN EN 60529
Protection class inside container	IP68 DIN EN 60529
Mounting type	Thread
Thread	G 1/2
Installation opening	G1/2
Connector type	-
Cable length	1 m