elobau GmbH & Co. KG
Zeppelinstr. 44
88299 Leutkirch, Germany

Tel.: +49 (0) 7561 970-0
Fax: +49 (0) 7561 970-100



Circular connector M8 4-pin

Product characteristics

- High protection class as well as high temperature range to meet the demands of adverse industrial environments
- Circular connector for customised assembly

Technical drawing

IMAGE 1/6

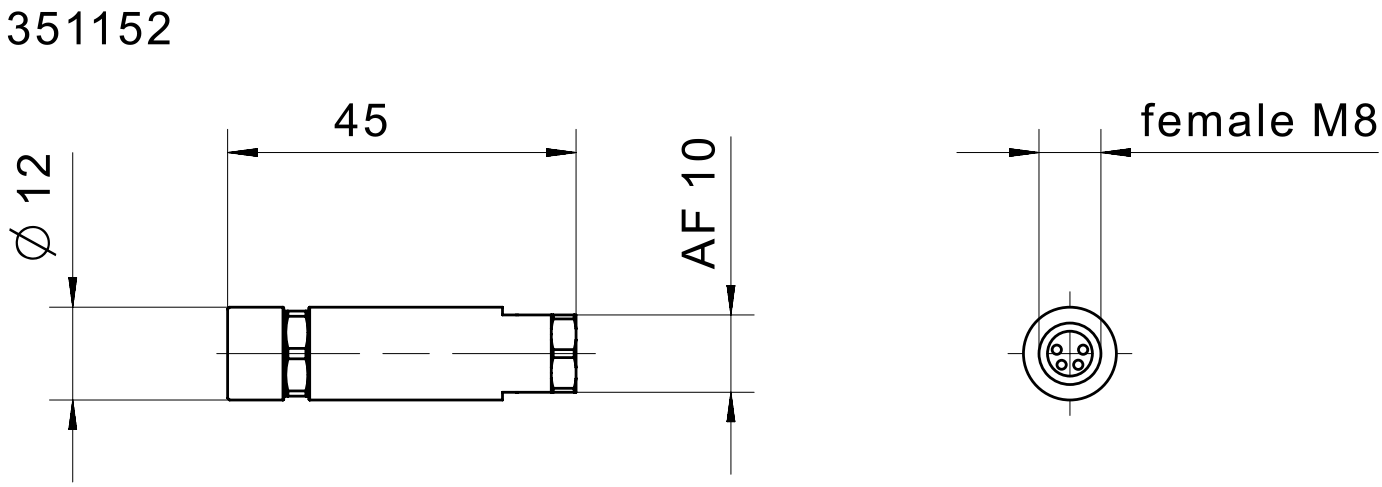

elobau GmbH & Co. KG
Zeppelinstr. 44
88299 Leutkirch, Germany

Tel.: +49 (0) 7561 970-0
Fax: +49 (0) 7561 970-100

IMAGE 2/6

female M8

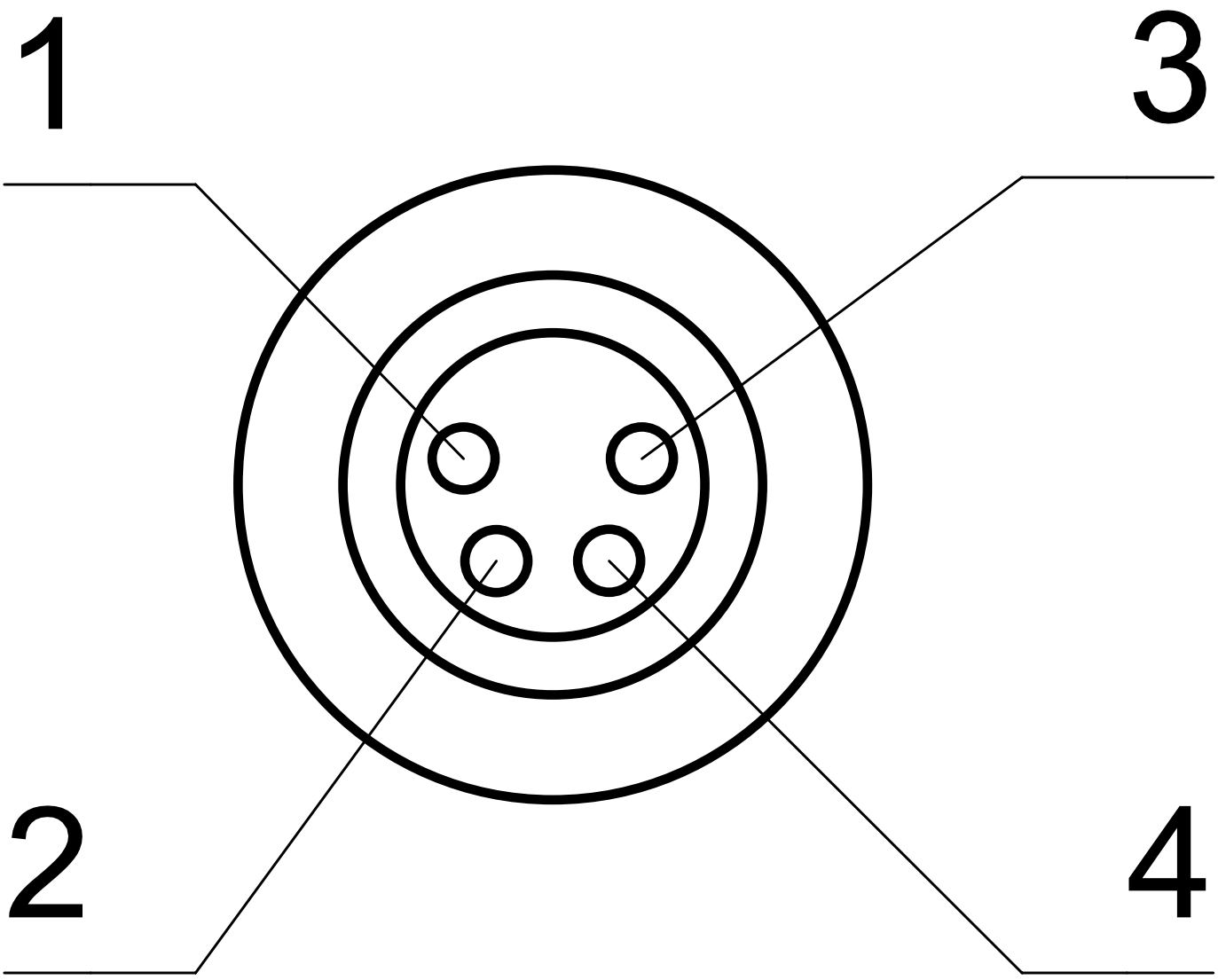

elobau GmbH & Co. KG
Zeppelinstr. 44
88299 Leutkirch, Germany

Tel.: +49 (0) 7561 970-0
Fax: +49 (0) 7561 970-100

IMAGE 3/6

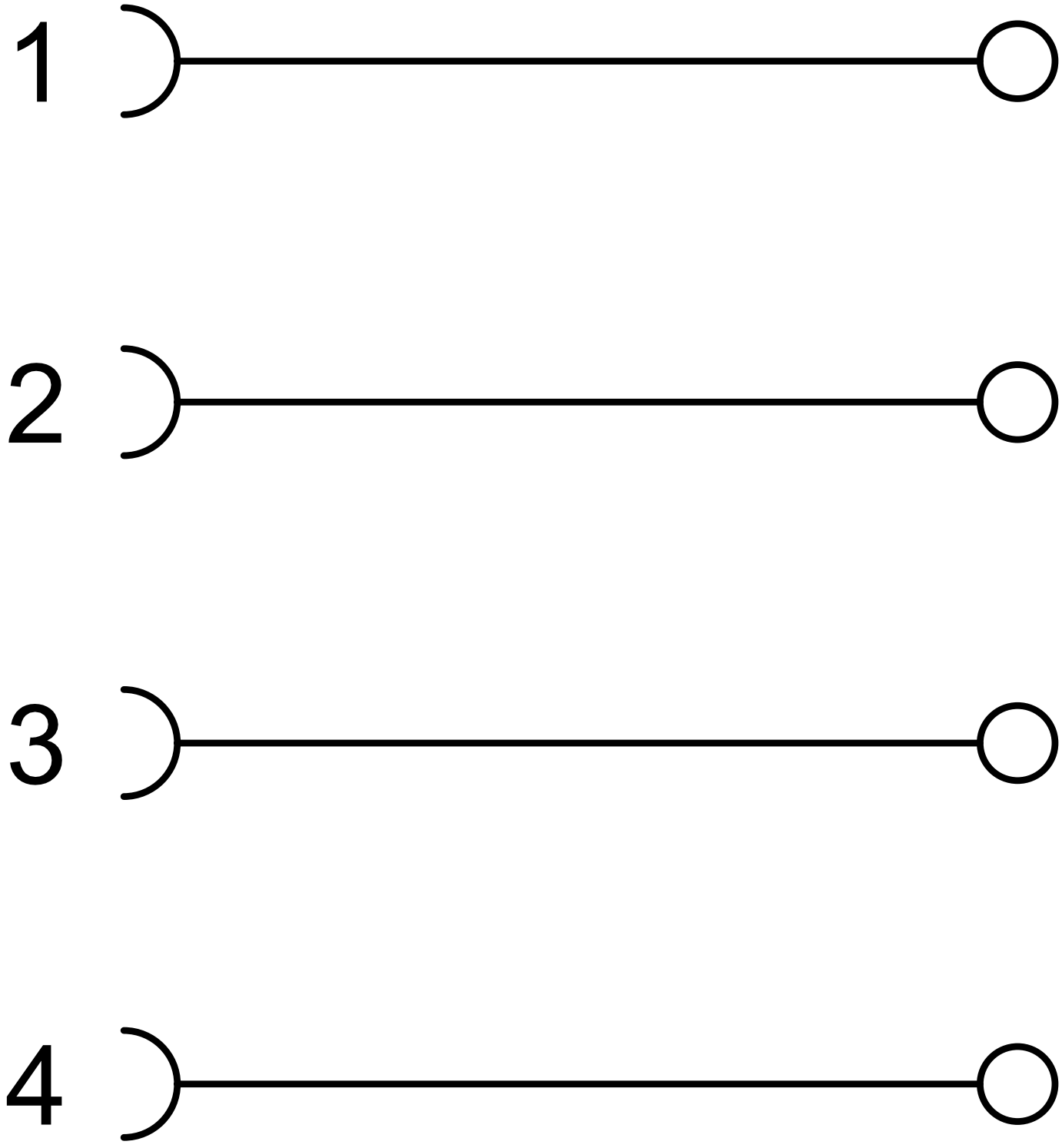

elobau GmbH & Co. KG
Zeppelinstr. 44
88299 Leutkirch, Germany

Tel.: +49 (0) 7561 970-0
Fax: +49 (0) 7561 970-100

IMAGE 4/6

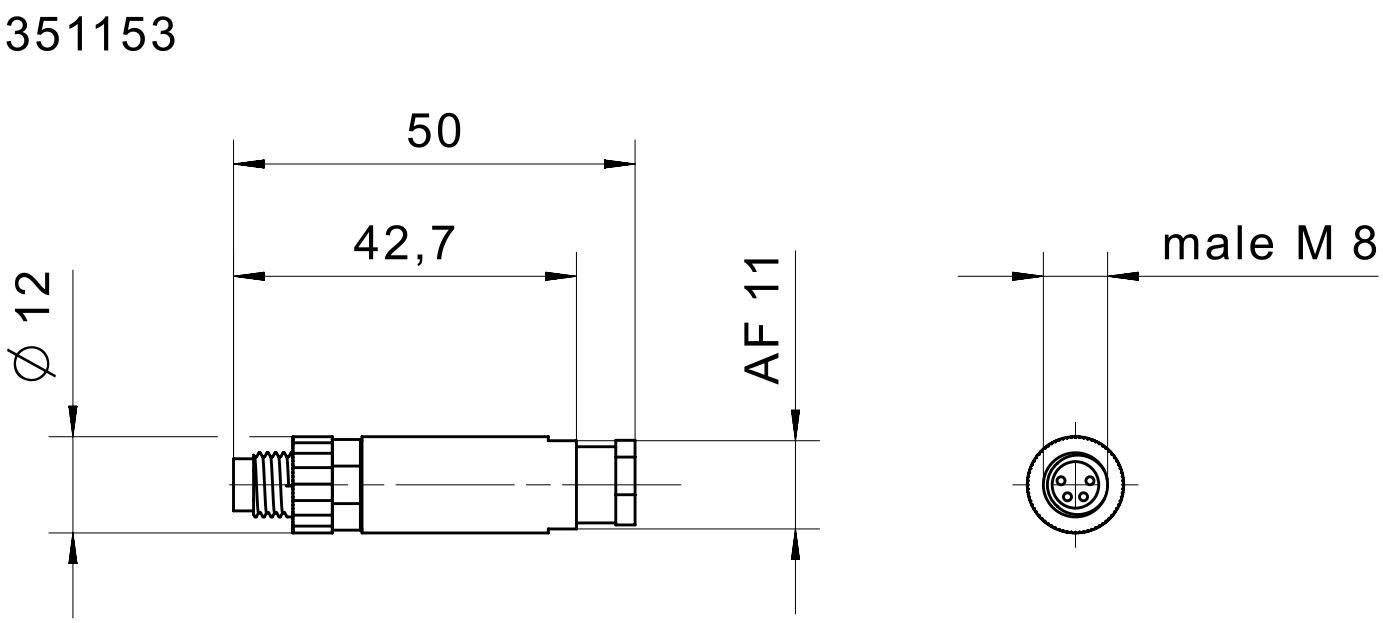

elobau GmbH & Co. KG
Zeppelinstr. 44
88299 Leutkirch, Germany

Tel.: +49 (0) 7561 970-0
Fax: +49 (0) 7561 970-100

IMAGE 5/6

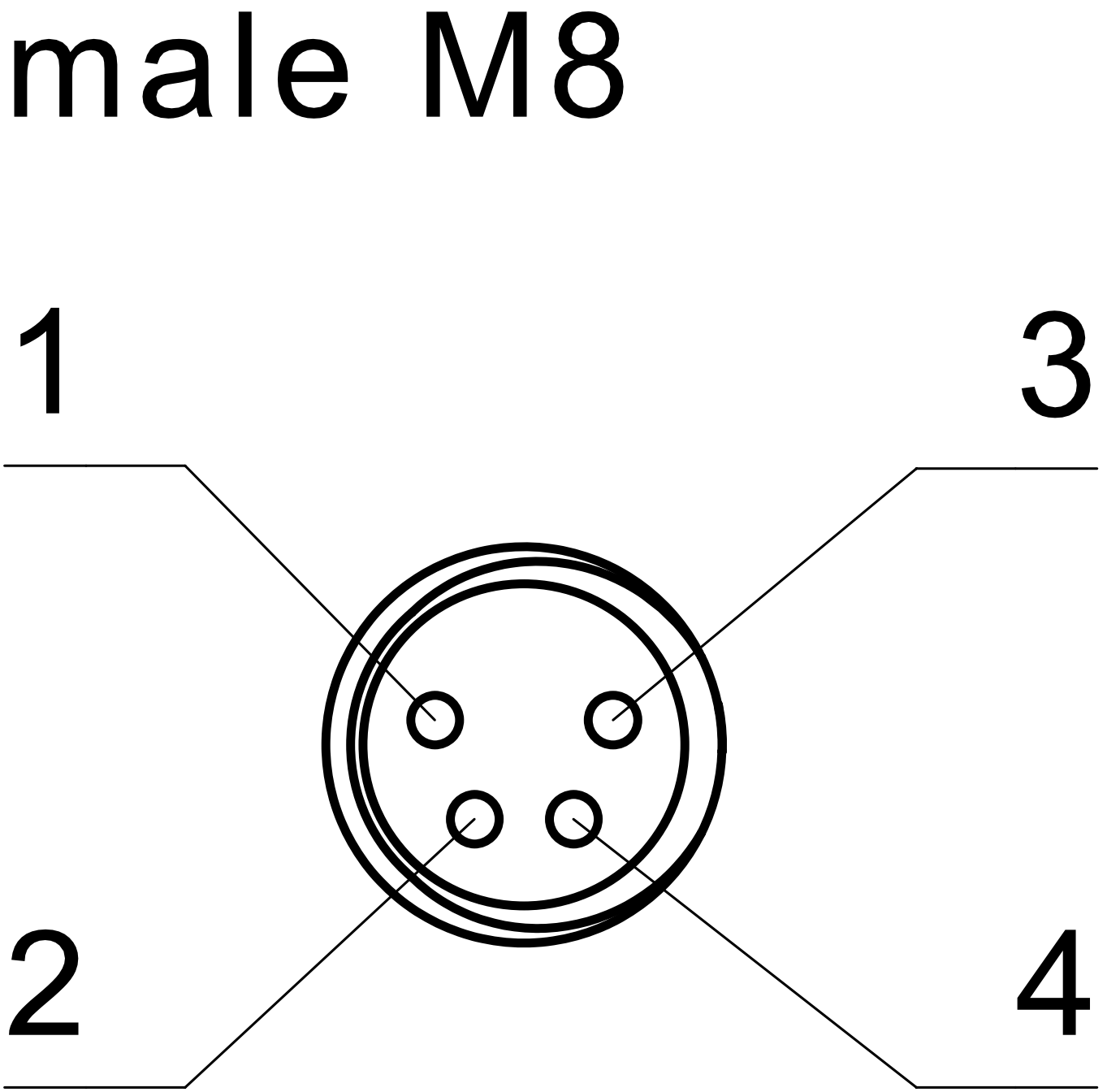

elobau GmbH & Co. KG
Zeppelinstr. 44
88299 Leutkirch, Germany

Tel.: +49 (0) 7561 970-0
Fax: +49 (0) 7561 970-100

IMAGE 6/6

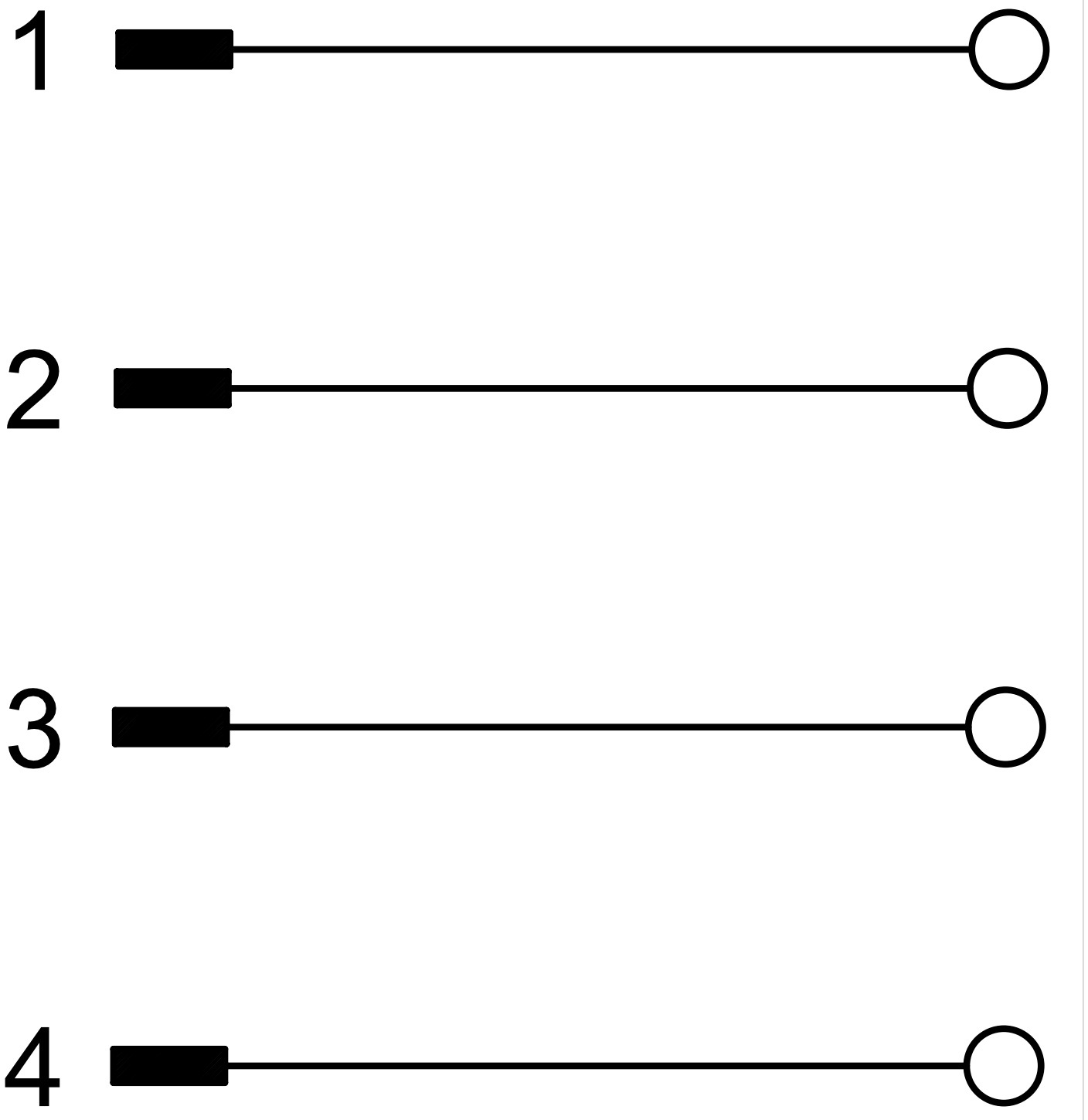

elobau GmbH & Co. KG
Zeppelinstr. 44
88299 Leutkirch, Germany

Tel.: +49 (0) 7561 970-0
Fax: +49 (0) 7561 970-100

Product options

IMAGE 1/1

ORDERING KEY

351		Circular connector, 4-pin
	152	Coupling socket M8
	153	Coupling connector M8
	150	Coupling socket M12
	151	Coupling connector M12
		more coupling sockets / connectors on request

elobau GmbH & Co. KG
Zeppelinstr. 44
88299 Leutkirch, Germany

Tel.: +49 (0) 7561 970-0
Fax: +49 (0) 7561 970-100

Article characteristics

Attribute	351152	351153
Max. switching current per contact	4 A	
Rated impulse withstand voltage (Uimp)	800 V	
Operating voltage max.	240 V DC	
Operating voltage max.	240 V AC	
Nut material	CuZi nickel-plated	
Overmould material	PA	
Operating temperature min.	-40 °C	
Max. operating temperature	85 °C	
Min. storage temperature	-40 °C	
Max. storage temperature	85 °C	
Pollution degree	3	
Torque for nuts	0,5 N m	
Connector type	M8 socket, straight	M8 connector, straight
Cable diameter	3,5 - 5,5 mm	
Number of pins	4	
Connection type	Screw connection	
Min. connection cross section	0.14 mm²	
Max. connection cross section	0.5 mm²	