elobau GmbH & Co. KG
Zeppelinstr. 44
88299 Leutkirch, Germany

Tel.: +49 (0) 7561 970-0
Fax: +49 (0) 7561 970-100



Terminating plug 350AGA2K01

For direct connection of e.g. eloProtect E sensors to M12 cables. Connection examples available from elobau.

Product characteristics

- Simple termination of series-connected eloProtect E sensors RFID
- Pluggable M12 version
- Simplifies wiring efforts

Technical drawing

IMAGE 1/3

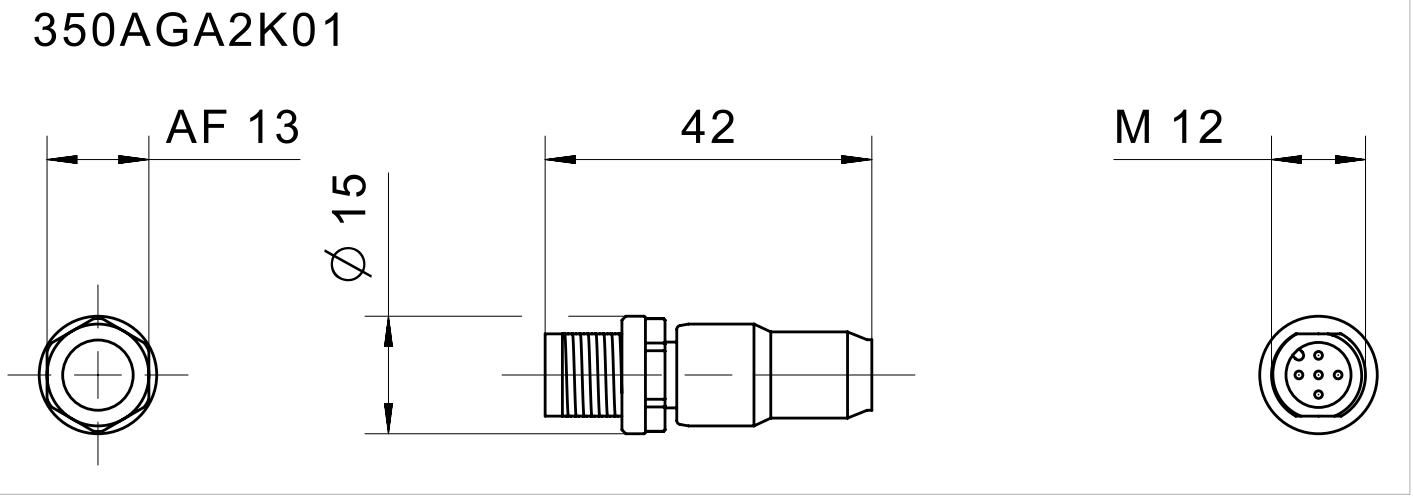

elobau GmbH & Co. KG
Zeppelinstr. 44
88299 Leutkirch, Germany

Tel.: +49 (0) 7561 970-0
Fax: +49 (0) 7561 970-100

IMAGE 2/3

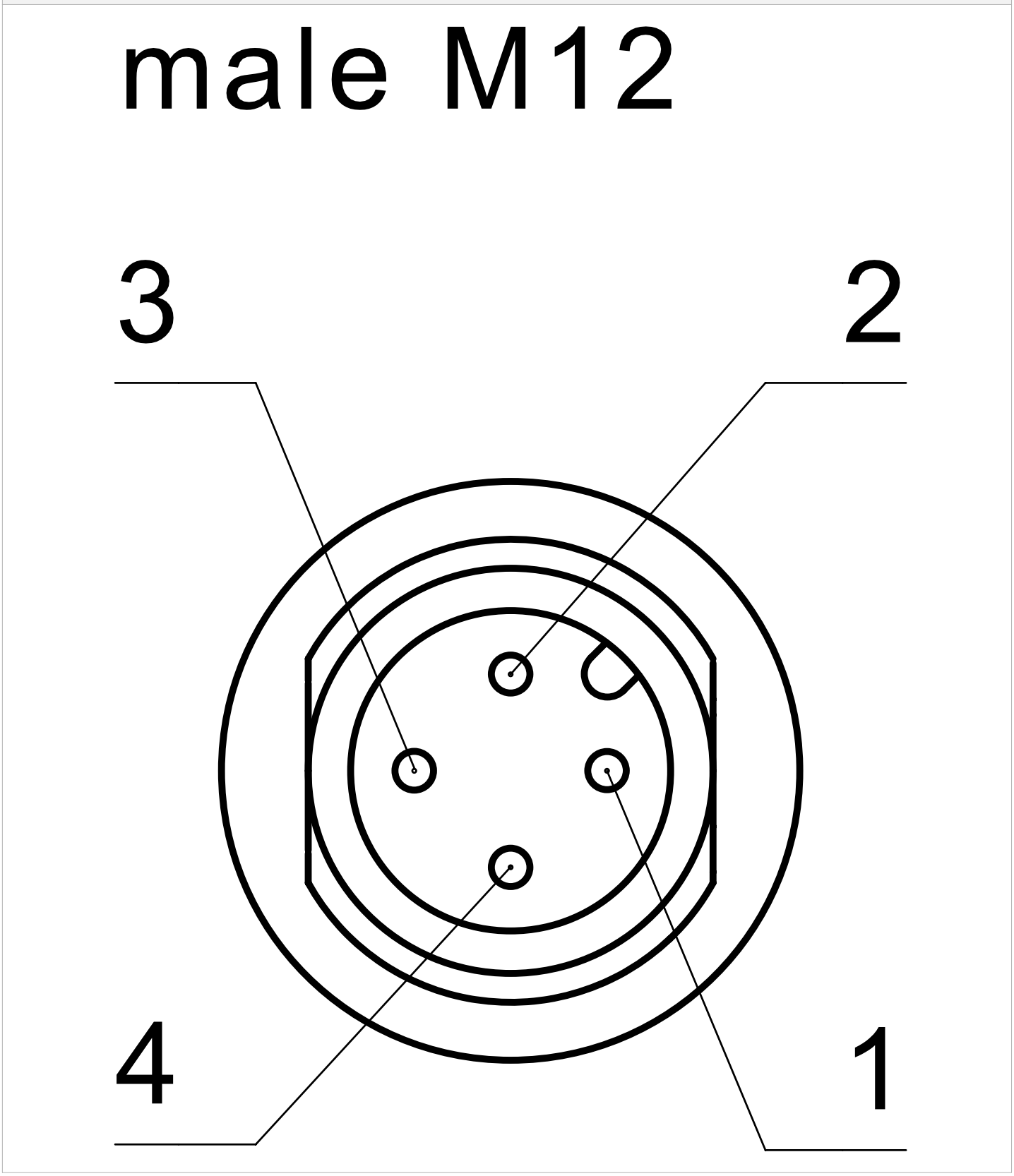

elobau GmbH & Co. KG
Zeppelinstr. 44
88299 Leutkirch, Germany

Tel.: +49 (0) 7561 970-0
Fax: +49 (0) 7561 970-100

IMAGE 3/3

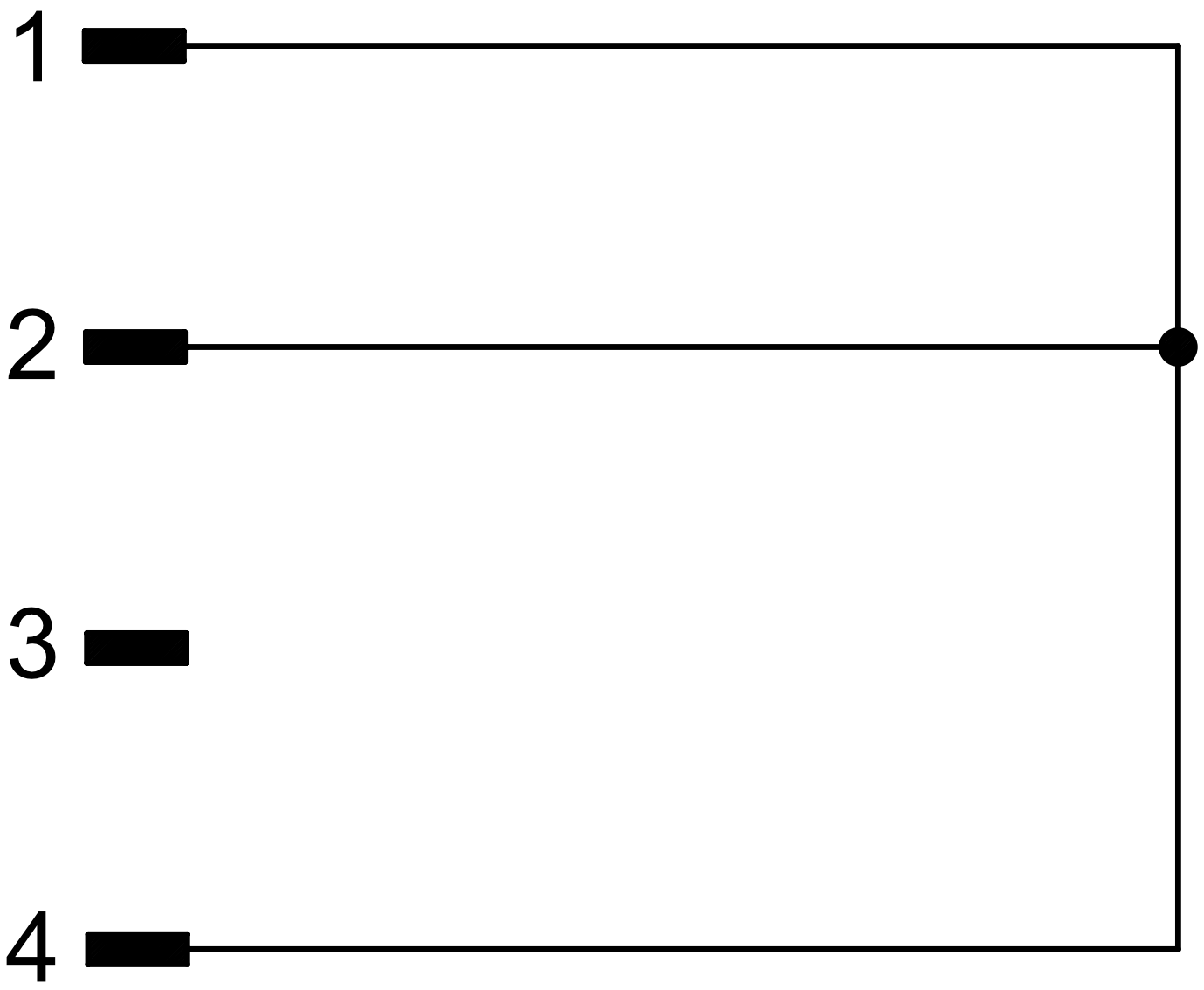

elobau GmbH & Co. KG
Zeppelinstr. 44
88299 Leutkirch, Germany

Tel.: +49 (0) 7561 970-0
Fax: +49 (0) 7561 970-100

Article characteristics

Attribute	350AGA2K01
Max. switching current per contact	4 A
Rated impulse withstand voltage (Uimp)	800 V
Pollution degree	3
Operating voltage max.	30 V DC
Operating voltage max.	30 V AC
Nut material	PA
Overmould material	PA
Protection class, connector	IP67 DIN EN 60529
Operating temperature min.	-25 °C
Max. operating temperature	85 °C
Min. storage temperature	-25 °C
Max. storage temperature	85 °C
Torque for nuts	0,6 N m
Connector type	M12 Stecker gerade
Connection type	geschraubt / gesteckt
Number of pins	4
Certified in accordance with	UL1977/CSA22.2 ECOLAB