elobau GmbH & Co. KG
Zeppelinstr. 44
88299 Leutkirch, Germany

Tel.: +49 (0) 7561 970-0
Fax: +49 (0) 7561 970-100



T-connector 350AT..K

T-connectors simplify the wiring (e.g. series connection) of the eloProtectE RFID safety sensors. Connection examples available from elobau.

Product characteristics

- Simple series connection of eloProtect E sensors RFID
- Pluggable M12 version
- Simplifies wiring efforts

elobau GmbH & Co. KG
Zeppelinstr. 44
88299 Leutkirch, Germany

Tel.: +49 (0) 7561 970-0
Fax: +49 (0) 7561 970-100

Technical drawing

IMAGE 1/9

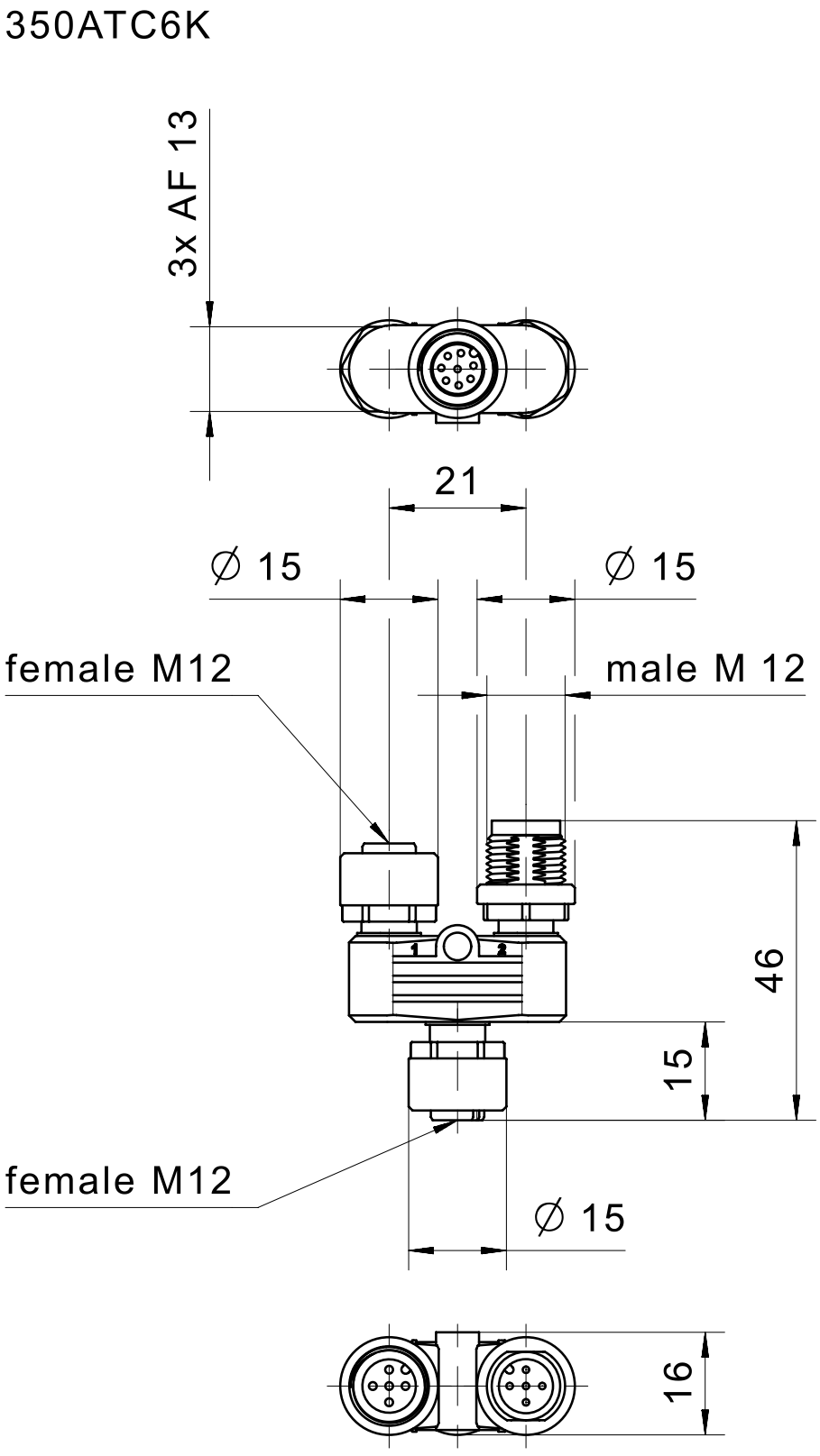

elobau GmbH & Co. KG
Zeppelinstr. 44
88299 Leutkirch, Germany

Tel.: +49 (0) 7561 970-0
Fax: +49 (0) 7561 970-100

IMAGE 2/9

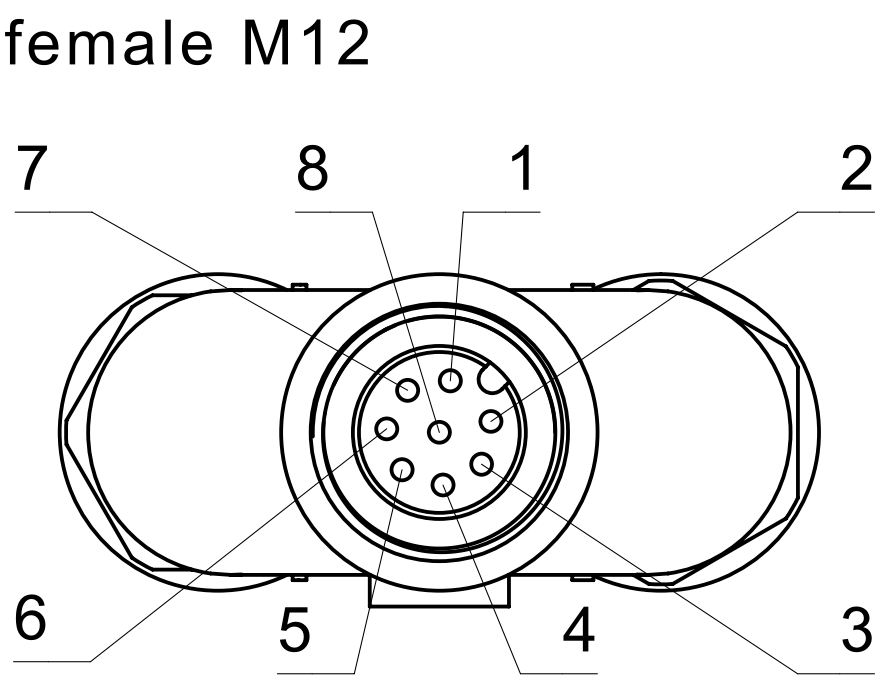

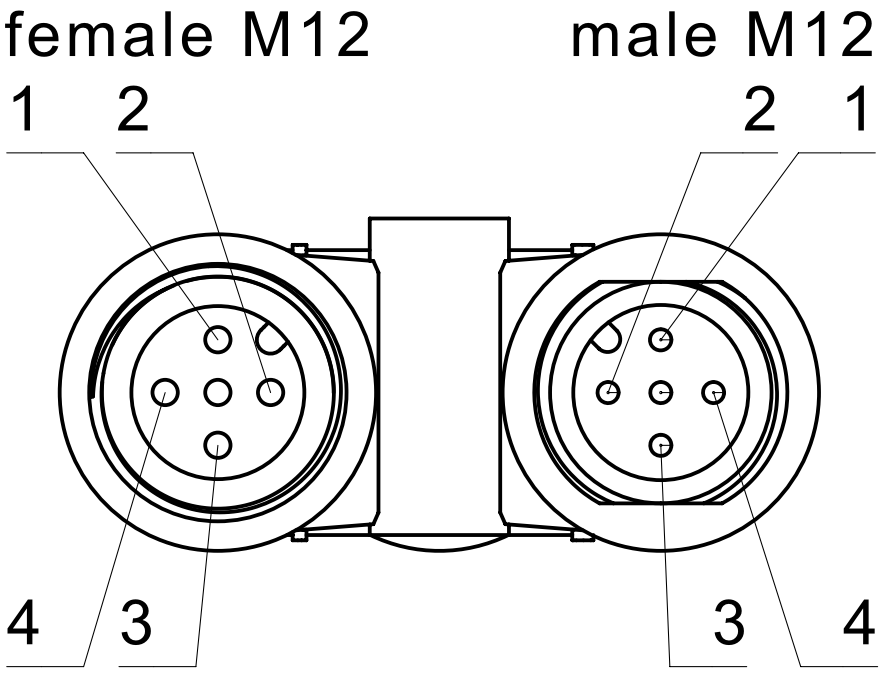

elobau GmbH & Co. KG
Zeppelinstr. 44
88299 Leutkirch, Germany

Tel.: +49 (0) 7561 970-0
Fax: +49 (0) 7561 970-100

IMAGE 3/9

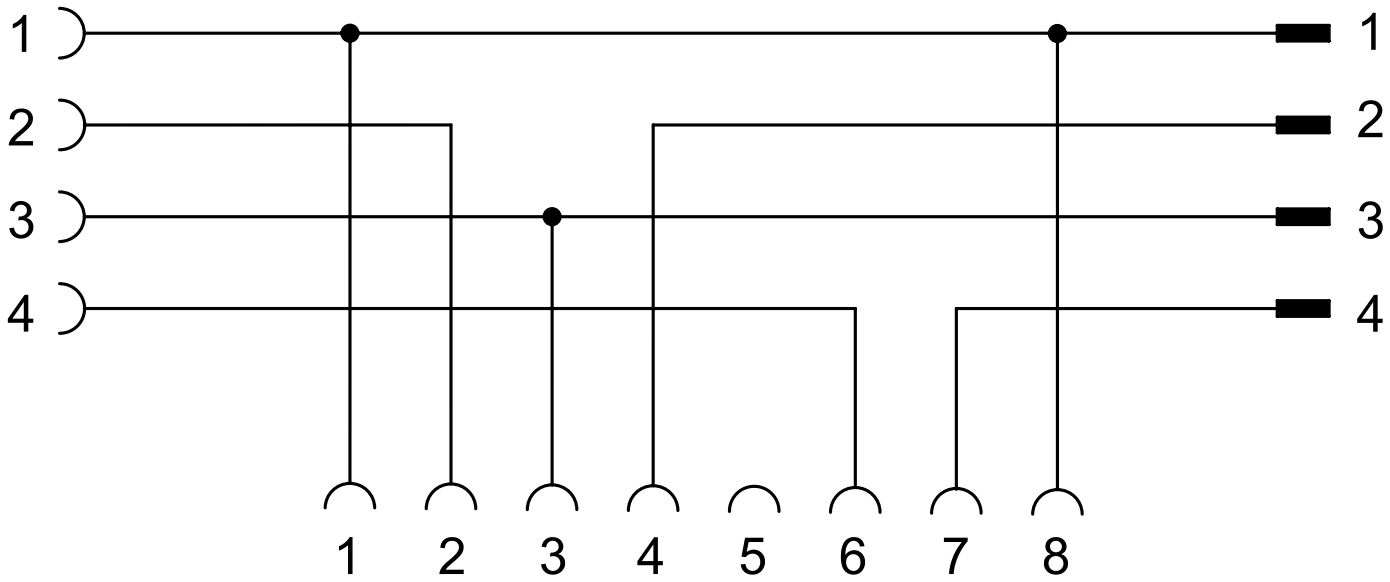

elobau GmbH & Co. KG
Zeppelinstr. 44
88299 Leutkirch, Germany

Tel.: +49 (0) 7561 970-0
Fax: +49 (0) 7561 970-100

IMAGE 4/9

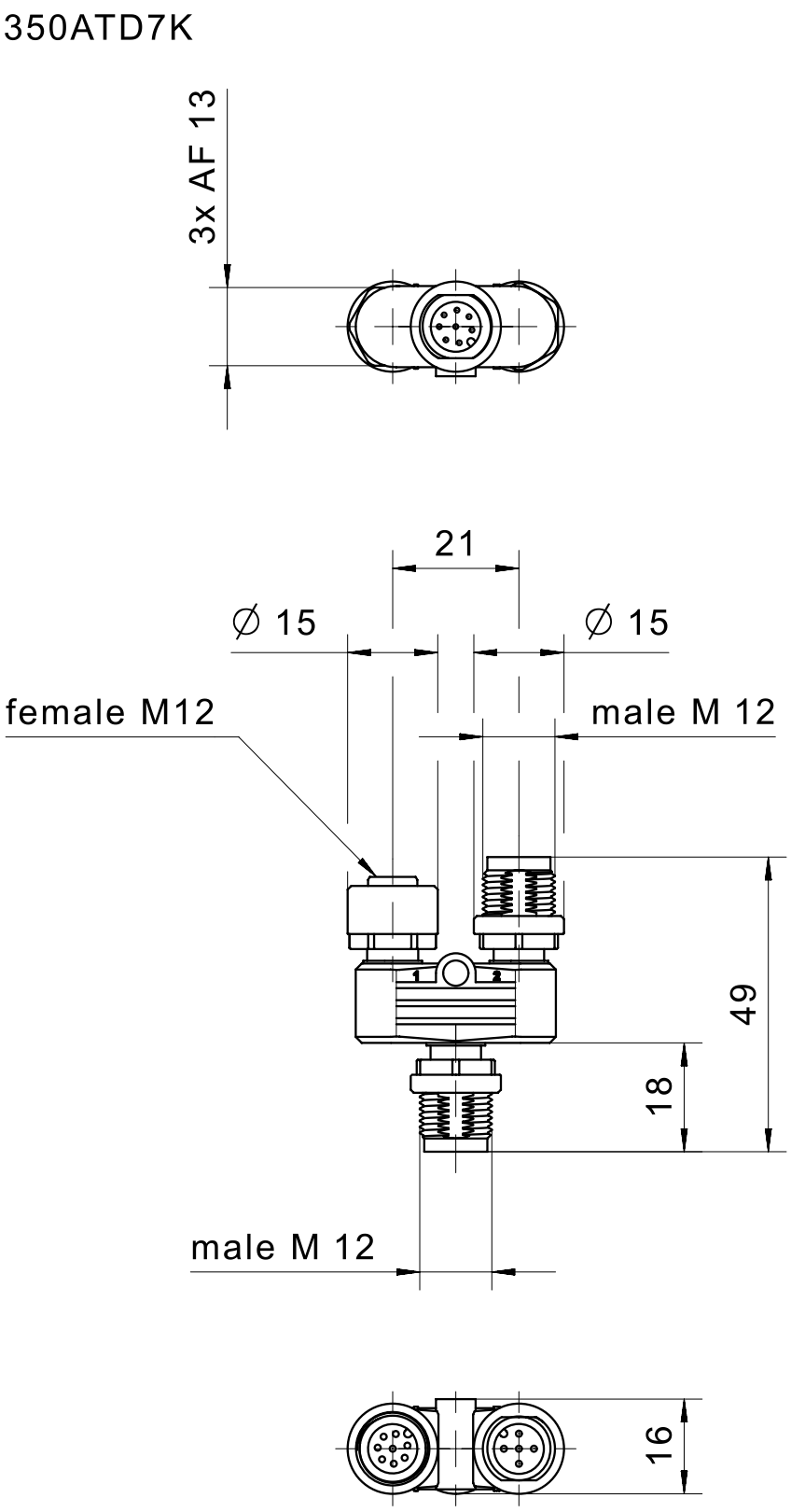

elobau GmbH & Co. KG
Zeppelinstr. 44
88299 Leutkirch, Germany

Tel.: +49 (0) 7561 970-0
Fax: +49 (0) 7561 970-100

IMAGE 5/9

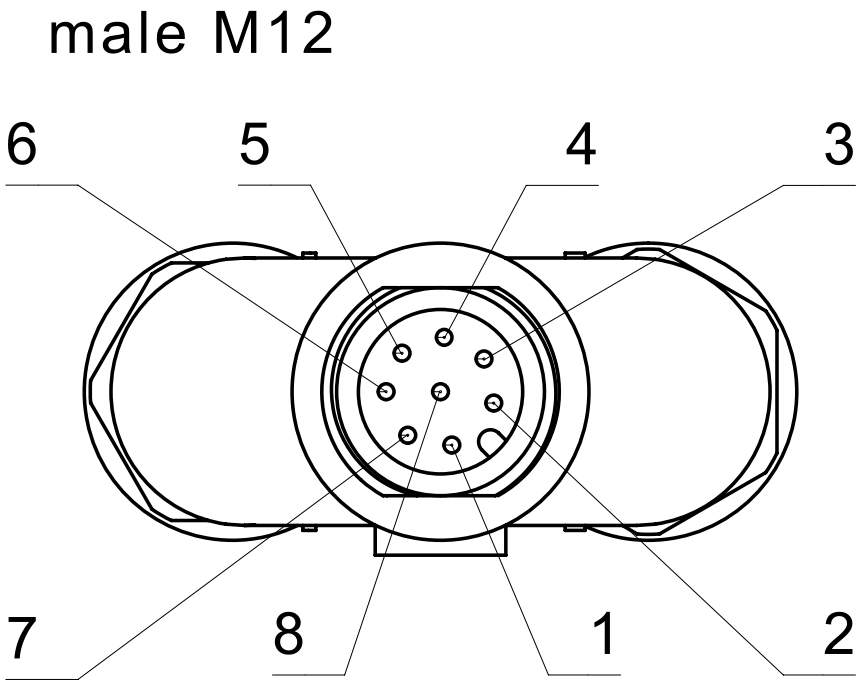

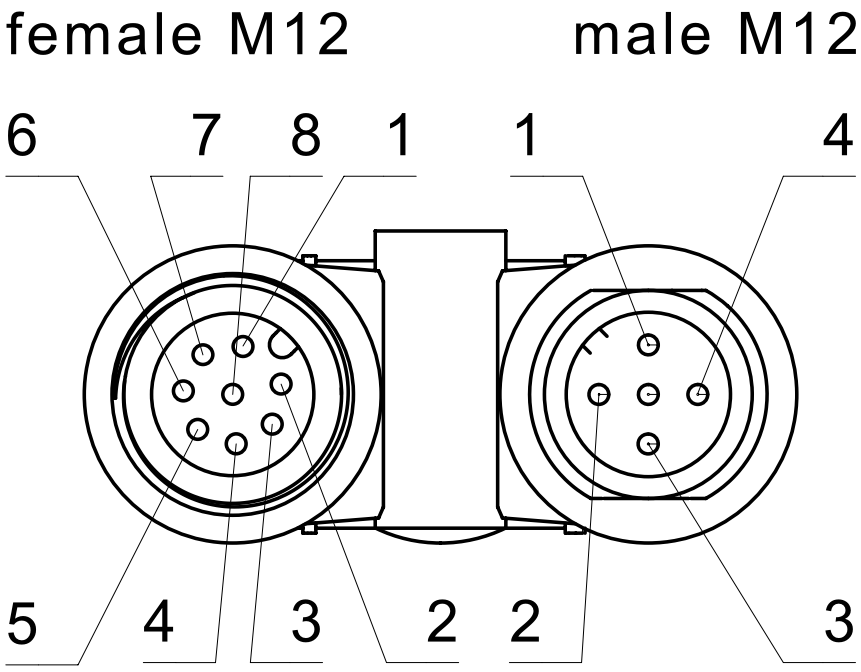

elobau GmbH & Co. KG
Zeppelinstr. 44
88299 Leutkirch, Germany

Tel.: +49 (0) 7561 970-0
Fax: +49 (0) 7561 970-100

IMAGE 6/9

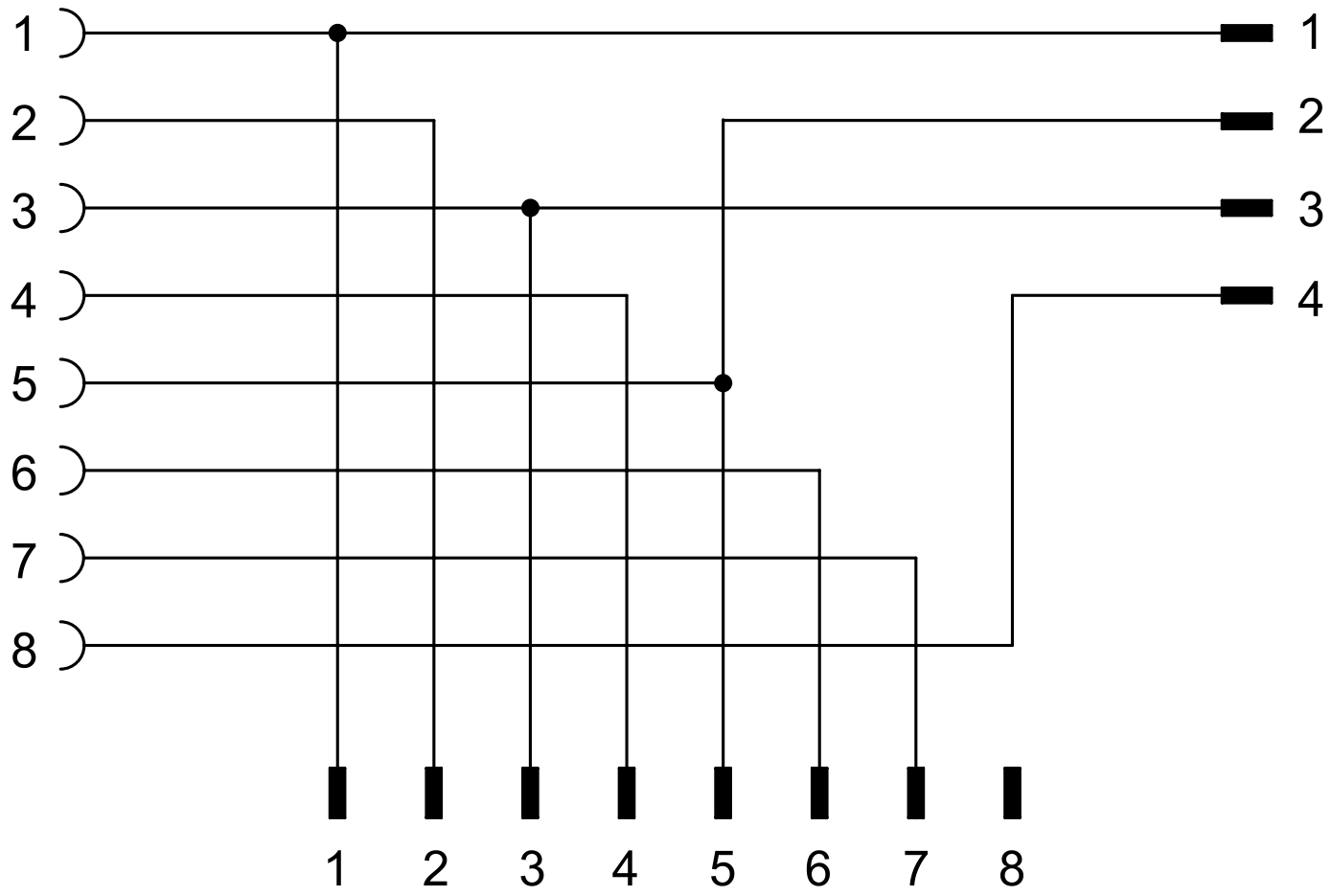

elobau GmbH & Co. KG
Zeppelinstr. 44
88299 Leutkirch, Germany

Tel.: +49 (0) 7561 970-0
Fax: +49 (0) 7561 970-100

IMAGE 7/9

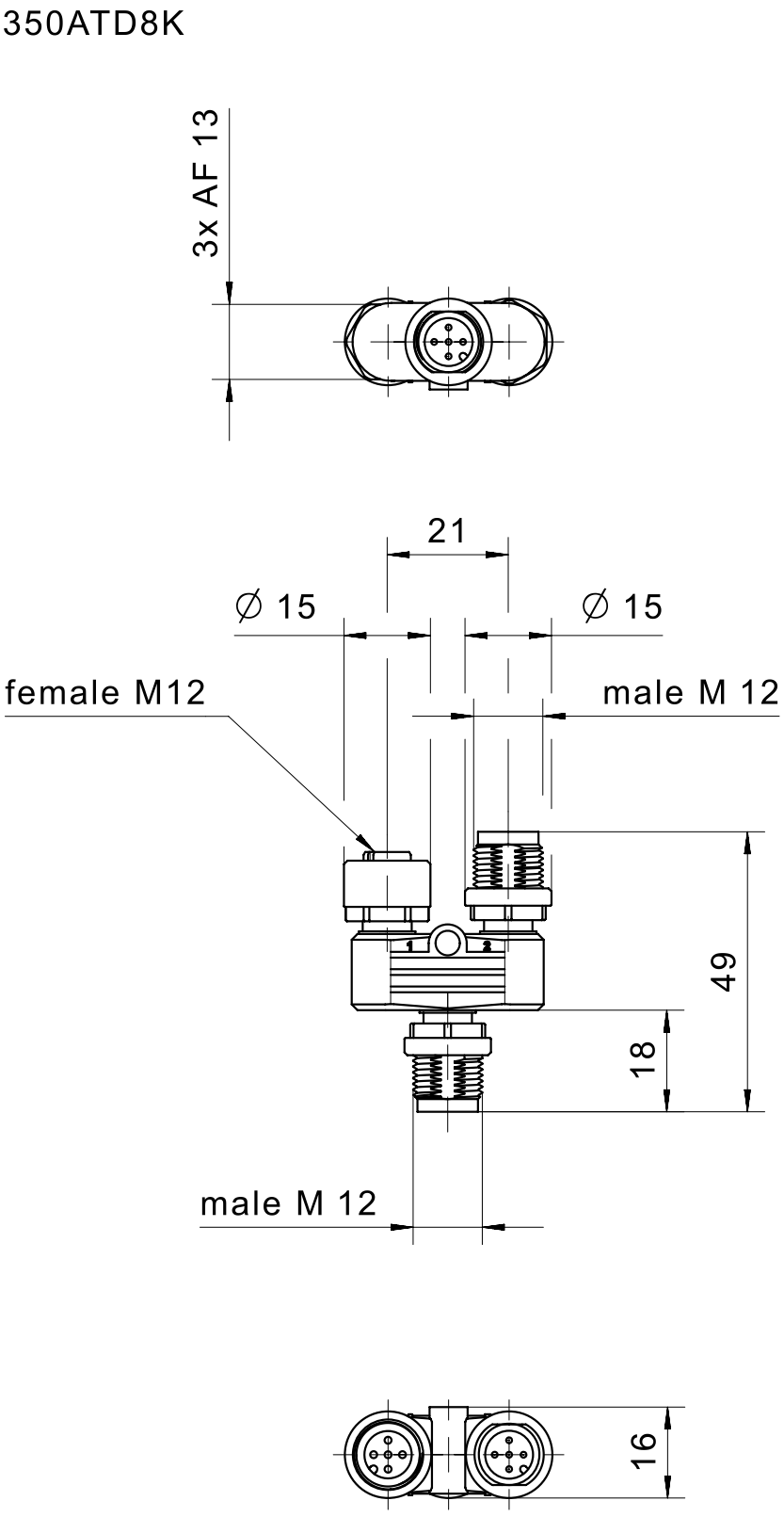

elobau GmbH & Co. KG
Zeppelinstr. 44
88299 Leutkirch, Germany

Tel.: +49 (0) 7561 970-0
Fax: +49 (0) 7561 970-100

IMAGE 8/9

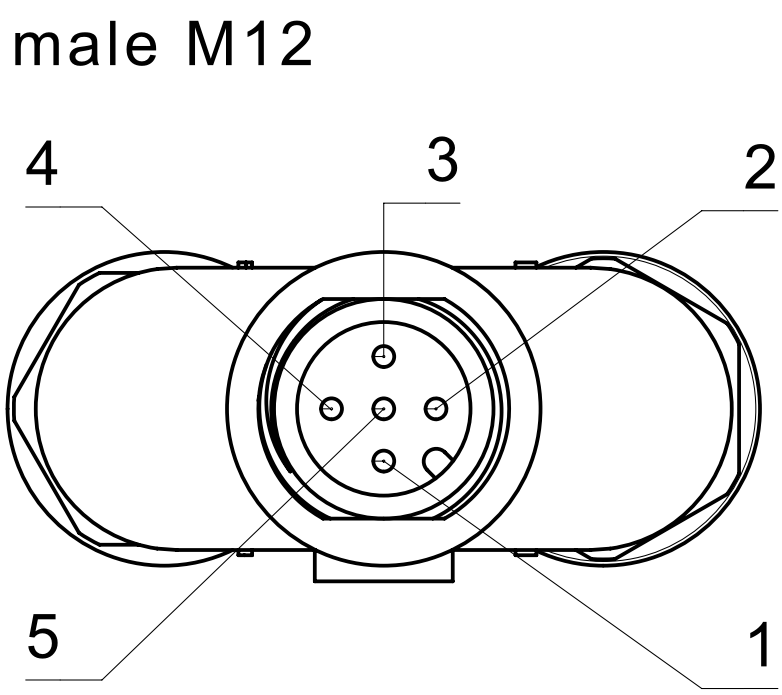

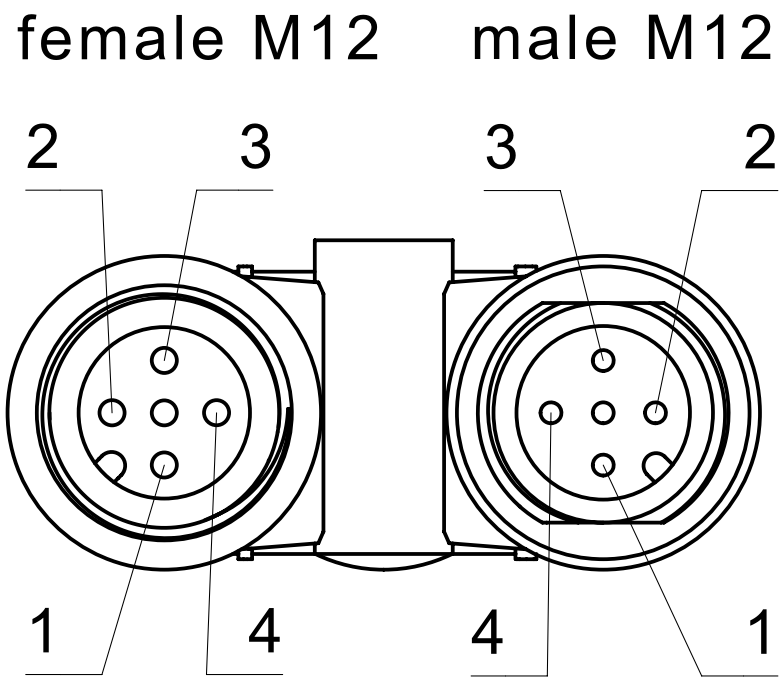

elobau GmbH & Co. KG
Zeppelinstr. 44
88299 Leutkirch, Germany

Tel.: +49 (0) 7561 970-0
Fax: +49 (0) 7561 970-100

IMAGE 9/9

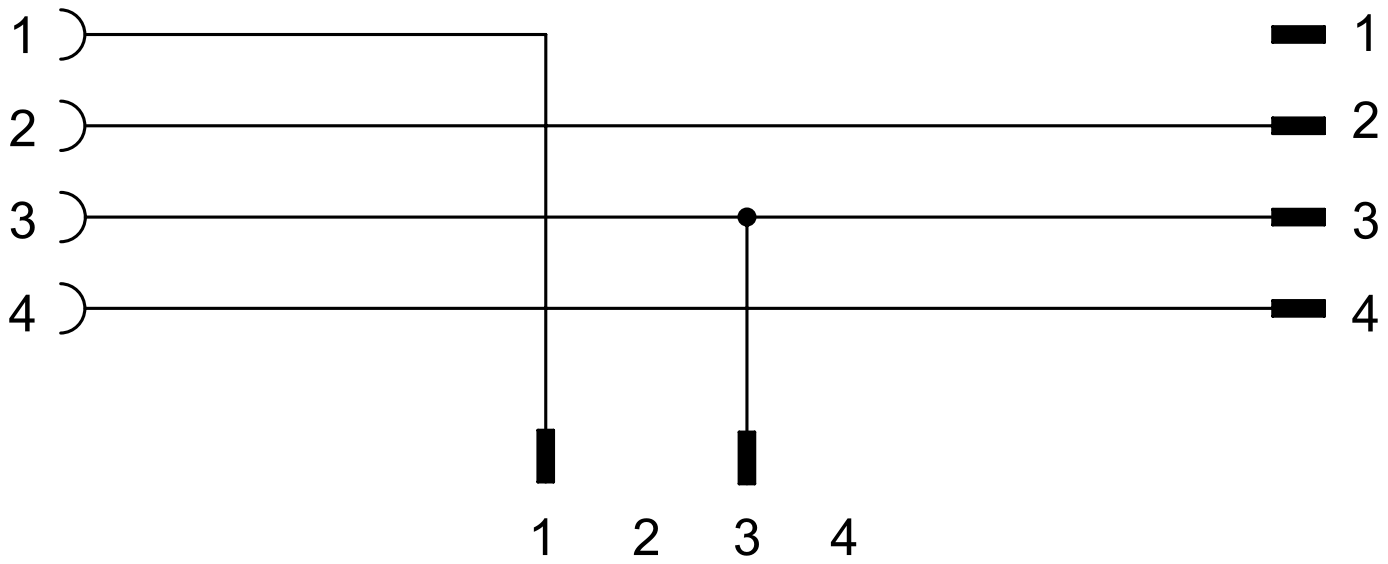

elobau GmbH & Co. KG
Zeppelinstr. 44
88299 Leutkirch, Germany

Tel.: +49 (0) 7561 970-0
Fax: +49 (0) 7561 970-100

Article characteristics

Attribute	350ATC6K	350ATD7K	350ATD8K
Max. switching current per contact	2 A		4 A
Rated impulse withstand voltage (Uimp)	800 V		
Pollution degree	3		
Operating voltage max.	30 V DC		60 V DC
Operating voltage max.	30 V AC		60 V AC
Nut material	PA		
Overmould material	PA		
Protection class, connector	IP67 DIN EN 60529		
Operating temperature min.	-25 °C		
Max. operating temperature	85 °C		
Min. storage temperature	-25 °C		
Max. storage temperature	85 °C		
Torque for nuts	0,6 N m		
Weight	16 g	17 g	15 g
Connector type	M12 Stecker gerade		
Connection type	geschraubt / gesteckt		
Number of pins	8/4/4	8/8/4	4/4/4
Certified in accordance with	UL1977/CSA22.2 ECOLAB		