elobau GmbH & Co. KG
Zeppelinstr. 44
88299 Leutkirch, Germany

Tel.: +49 (0) 7561 970-0
Fax: +49 (0) 7561 970-100



Coupling socket and coupling connector 35115

Product characteristics

- Field-attachable connectors and sockets M12, 4-pin
- Flexible cable lengths possible through elf-assembly

Technical drawing

IMAGE 1/9

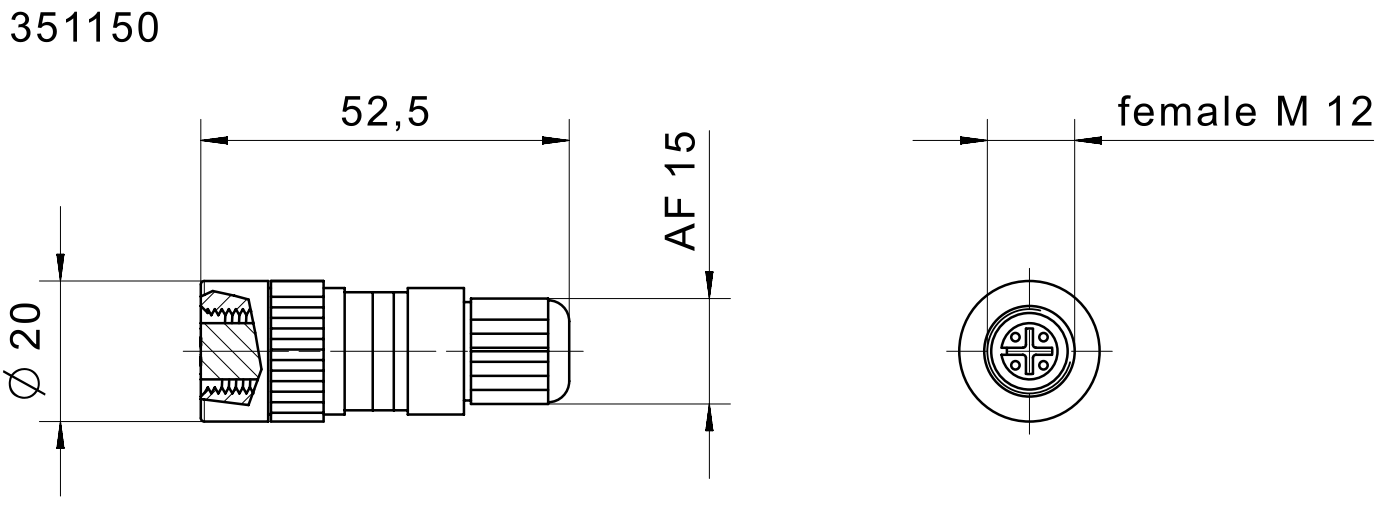

elobau GmbH & Co. KG
Zeppelinstr. 44
88299 Leutkirch, Germany

Tel.: +49 (0) 7561 970-0
Fax: +49 (0) 7561 970-100

IMAGE 2/9

female M12

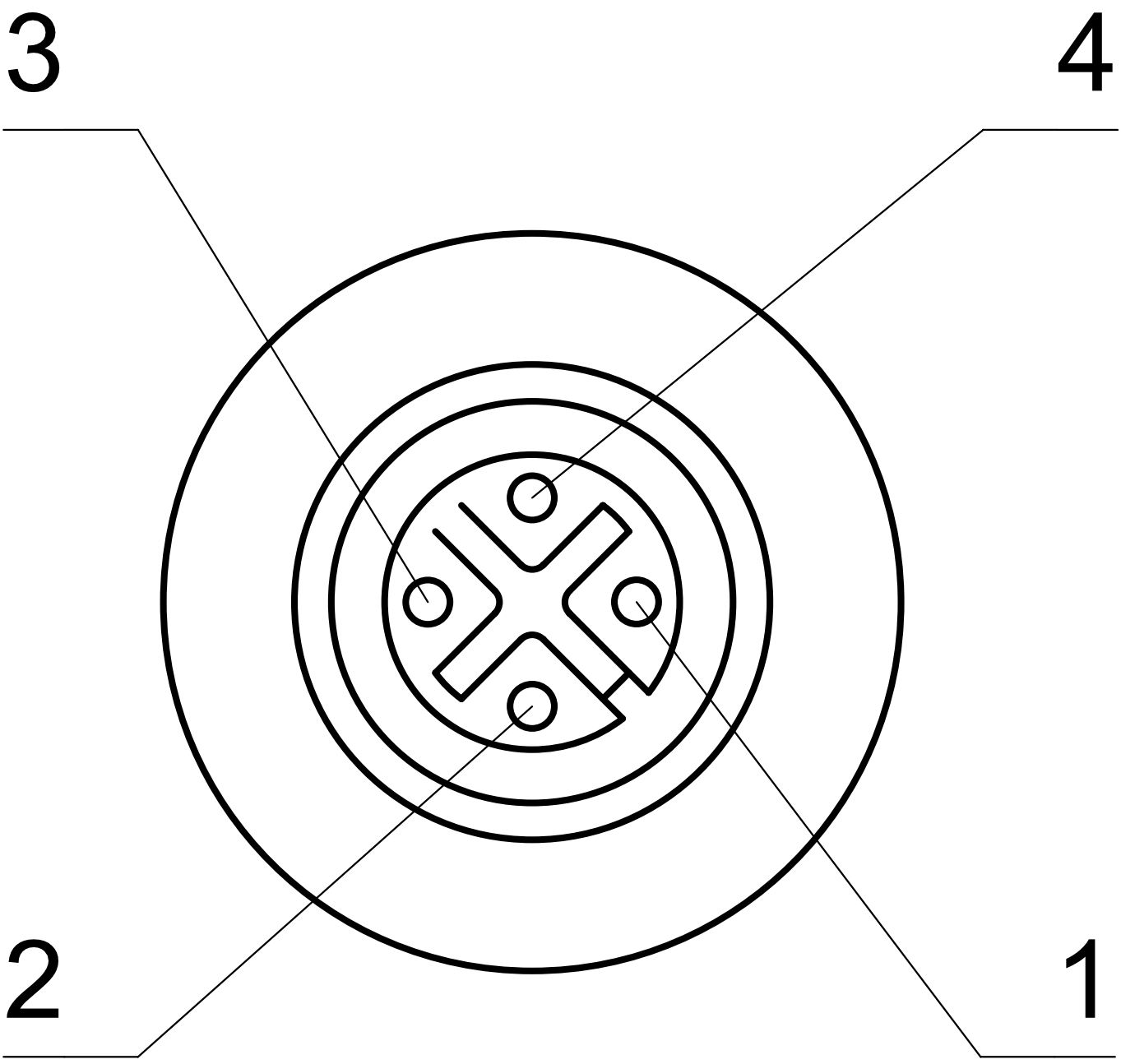

elobau GmbH & Co. KG
Zeppelinstr. 44
88299 Leutkirch, Germany

Tel.: +49 (0) 7561 970-0
Fax: +49 (0) 7561 970-100

IMAGE 3/9

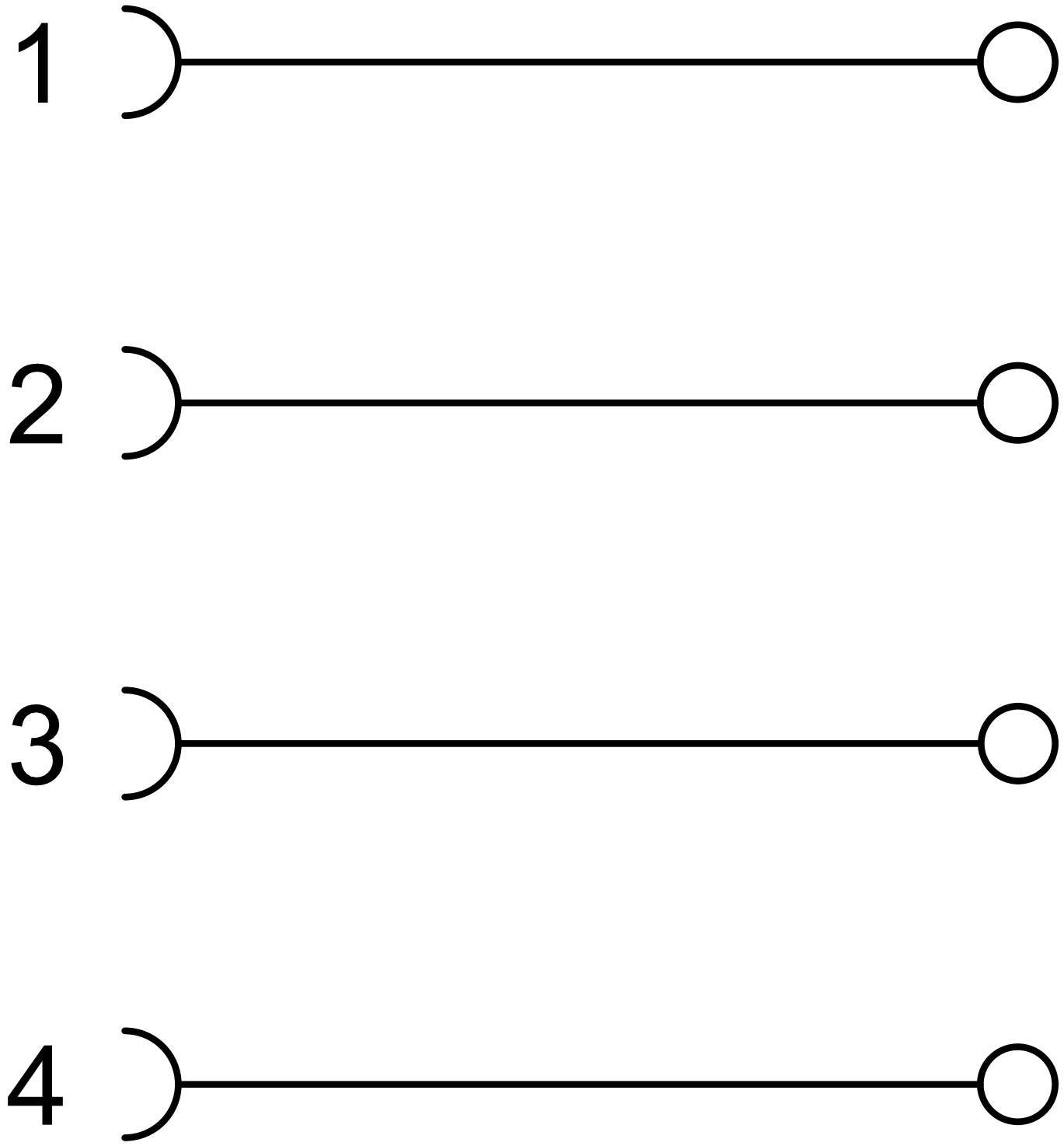

elobau GmbH & Co. KG
Zeppelinstr. 44
88299 Leutkirch, Germany

Tel.: +49 (0) 7561 970-0
Fax: +49 (0) 7561 970-100

IMAGE 4/9

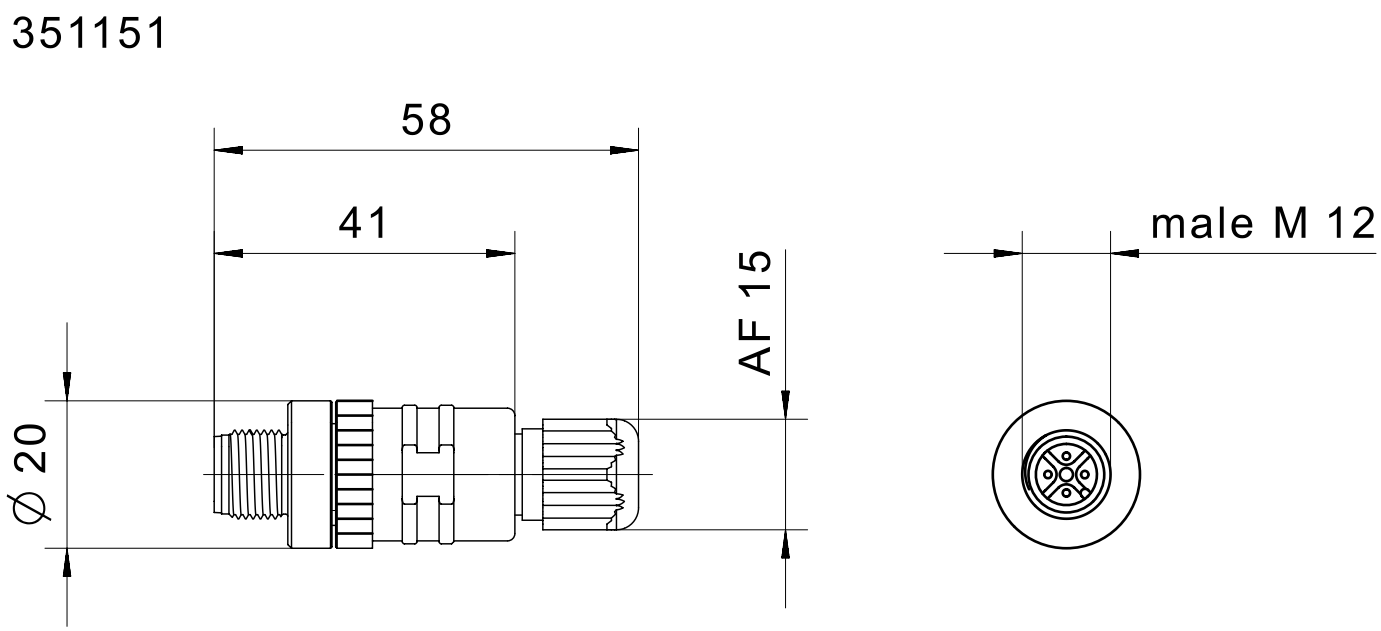

elobau GmbH & Co. KG
Zeppelinstr. 44
88299 Leutkirch, Germany

Tel.: +49 (0) 7561 970-0
Fax: +49 (0) 7561 970-100

IMAGE 5/9

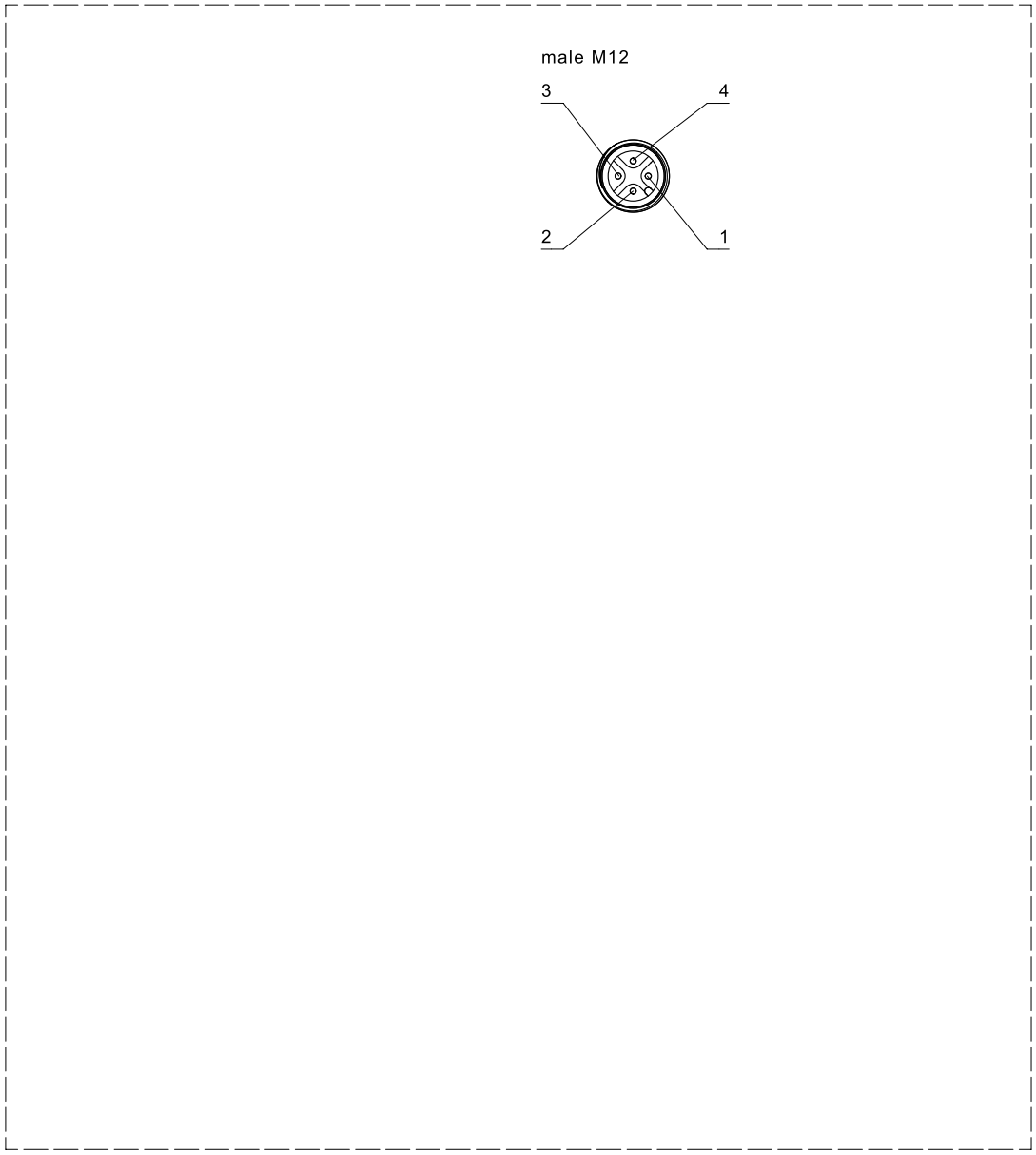

elobau sensor technology	Maßstab		Benennung
	Revision	E	Kupplungsdose
Status	Gepr. Datum	29.03.19	Nummer
	Geprüft	pr1mi	Cat_351151

elobau GmbH & Co. KG
Zeppelinstr. 44
88299 Leutkirch, Germany

Tel.: +49 (0) 7561 970-0
Fax: +49 (0) 7561 970-100

IMAGE 6/9

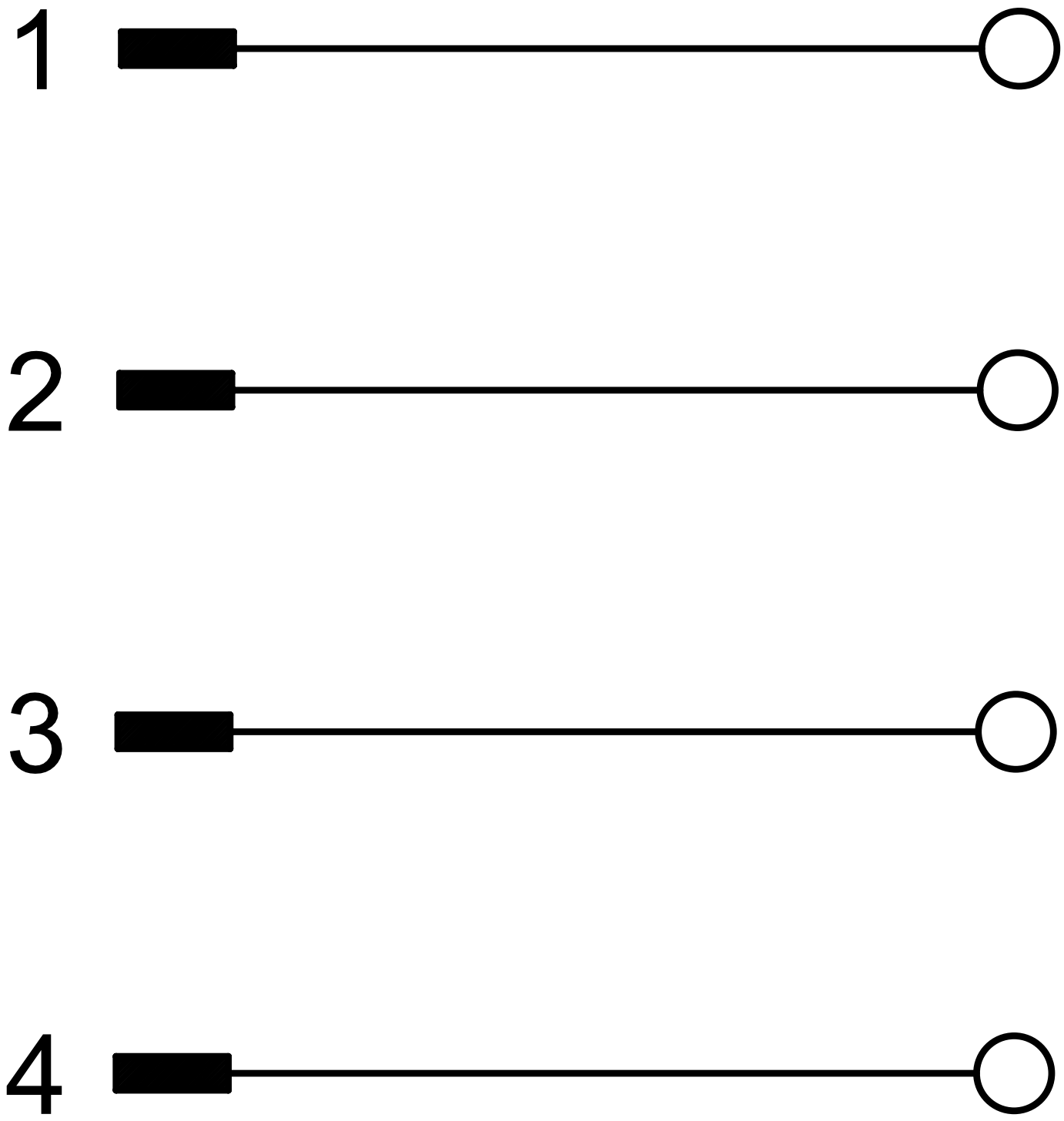

elobau GmbH & Co. KG
Zeppelinstr. 44
88299 Leutkirch, Germany

Tel.: +49 (0) 7561 970-0
Fax: +49 (0) 7561 970-100

IMAGE 7/9

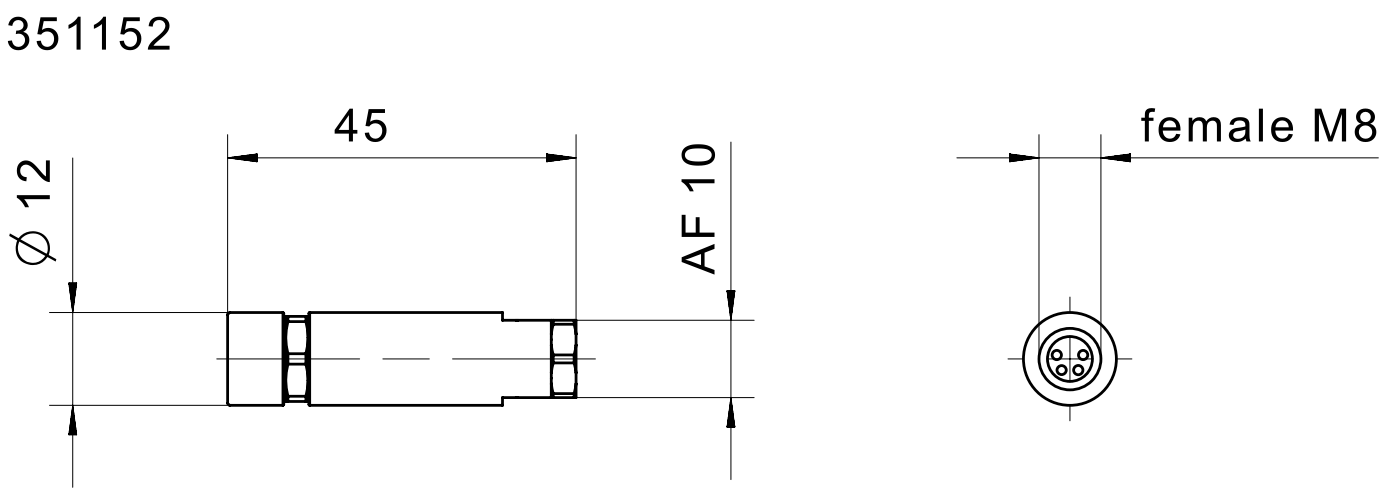

elobau GmbH & Co. KG
Zeppelinstr. 44
88299 Leutkirch, Germany

Tel.: +49 (0) 7561 970-0
Fax: +49 (0) 7561 970-100

IMAGE 8/9

female M8

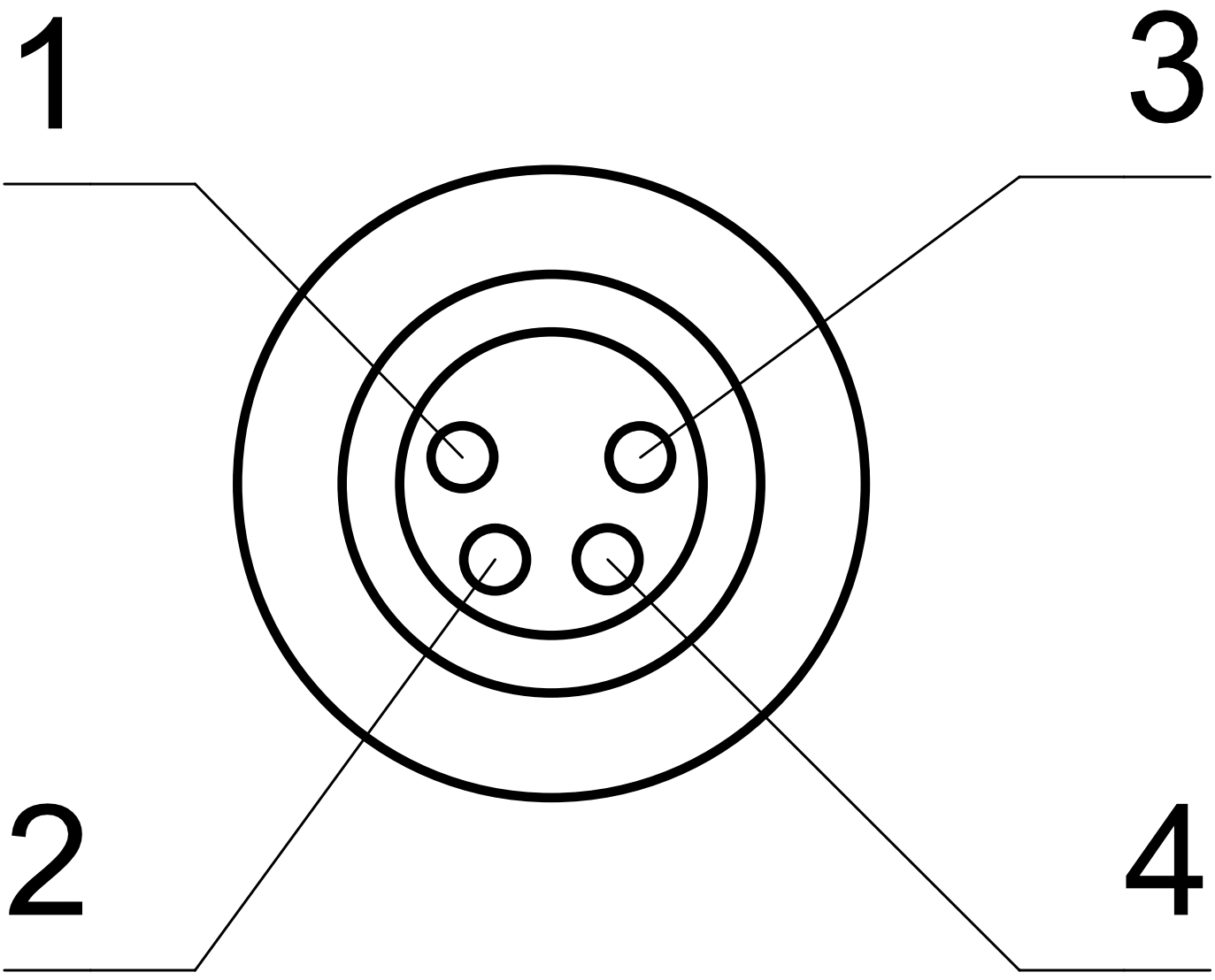

elobau GmbH & Co. KG
Zeppelinstr. 44
88299 Leutkirch, Germany

Tel.: +49 (0) 7561 970-0
Fax: +49 (0) 7561 970-100

IMAGE 9/9

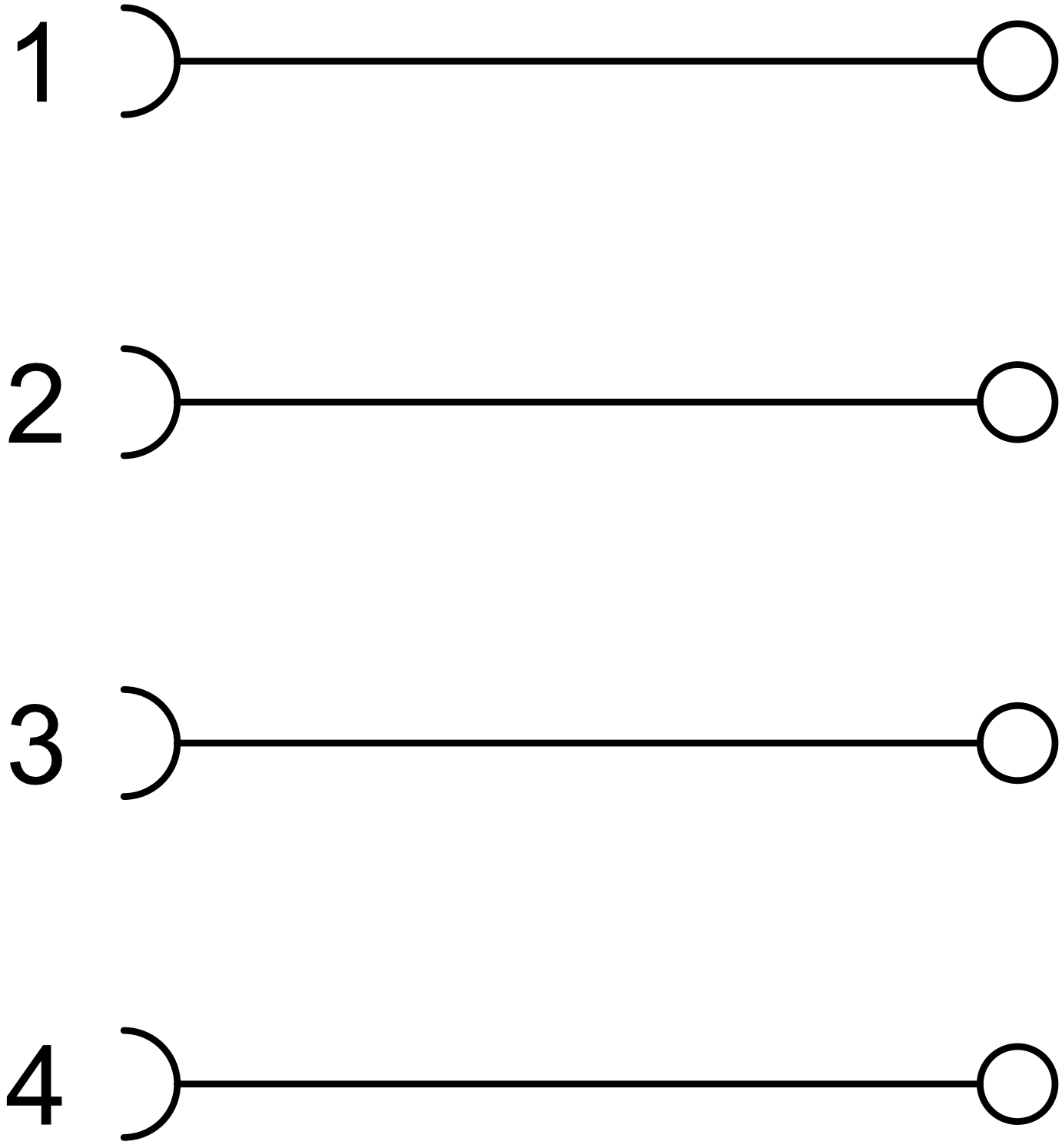

elobau GmbH & Co. KG
Zeppelinstr. 44
88299 Leutkirch, Germany

Tel.: +49 (0) 7561 970-0
Fax: +49 (0) 7561 970-100

Product options

IMAGE 1/1

ORDERING KEY

351		Field-attachable connector
	150	M12 socket
	151	M12 connector
	152	M8 socket
	153	M8 connector

elobau GmbH & Co. KG
Zeppelinstr. 44
88299 Leutkirch, Germany

Tel.: +49 (0) 7561 970-0
Fax: +49 (0) 7561 970-100

Article characteristics

Attribute	351150	351151	351152	351153
Max. switching current per contact	4 A			
Rated impulse withstand voltage (Uimp)	2500 V		800 V	
Pollution degree	3			
Operating voltage max.	240 V DC			
Operating voltage max.	240 V AC			
Nut material	CuZi nickel-plated			
Overmould material	PA			
Operating temperature min.	-40 °C			
Max. operating temperature	85 °C			
Min. storage temperature	-40 °C			
Max. storage temperature	85 °C			
Torque for nuts	0,5 N m			
Weight	23 g		10 g	
Connector type	M12 socket, straight	M12 connector, straight	M8 socket, straight	M8 connector, straight
Connection type	Screw connection			
Cable diameter	3 - 6,5 mm		3,5 - 5,5 mm	
Number of pins	4			
Min. connection cross section	0.14 mm²			
Max. connection cross section	0.75 mm²		0.5 mm²	
Certified in accordance with	UL 2238/CSA22.2		–	