elobau GmbH & Co. KG
Zeppelinstr. 44
88299 Leutkirch, Germany

Tel.: +49 (0) 7561 970-0
Fax: +49 (0) 7561 970-100

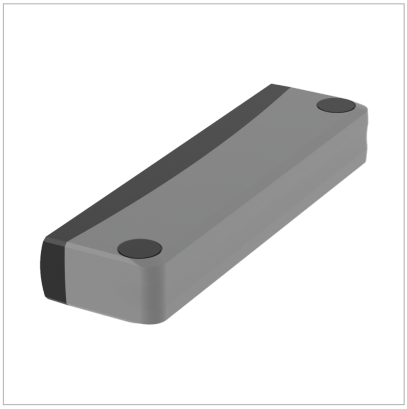

Actuator 165MBK

When used with the corresponding safety sensor, the magnetic actuator of the new eloProtect M range enables optimised operating distances and offset values as well as increased tampering protection.

Technical specifications

- Flexibility in installation and use from variable actuation direction
- Space saving and simple installation through small size
- Screw covers prevent easy removal and the accumulation of dirt
- Strong resistance against cleaning agents (ECOLAB) makes this suitable for use in the food and packaging industries.

Technical drawing

IMAGE 1/1

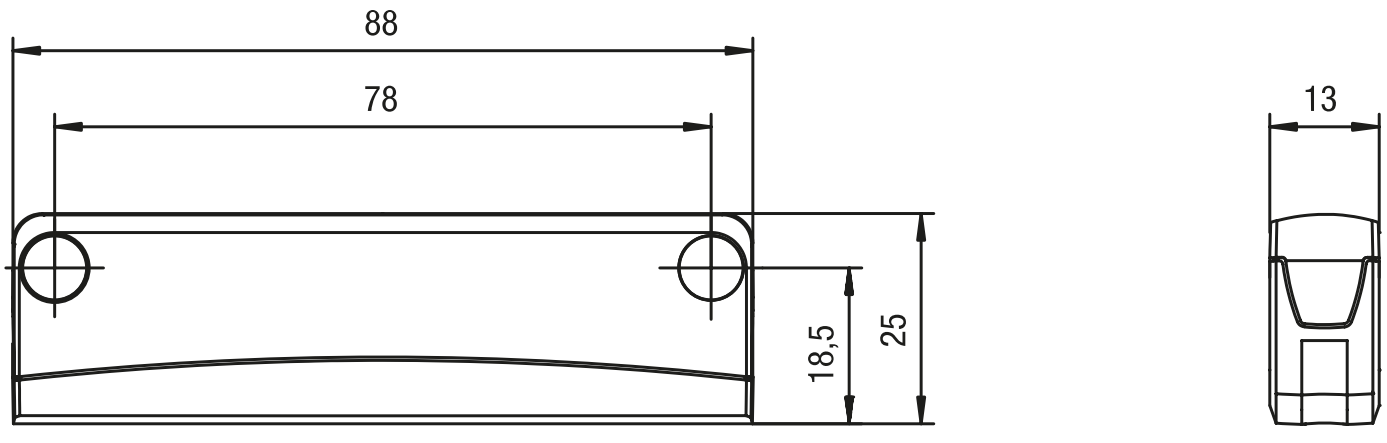

elobau GmbH & Co. KG
Zeppelinstr. 44
88299 Leutkirch, Germany

Tel.: +49 (0) 7561 970-0
Fax: +49 (0) 7561 970-100

Product options

IMAGE 1/1

ACTUATORS

Actuators	Actuation direction	165MSK00.1A 165MSK00.1G			165MSK00.1E 165MSK00.1K			165MSK00.1B 165MSK00.1H		
		SO_{min}	S_{ao}	S_{ar}	SO_{min}	S_{ao}	S_{ar}	SO_{min}	S_{ao}	S_{ar}
165 MBK 001	Front	0.5	5	14	-	-	-	0.5	5	14
165 MBK 101		0.5	8	18	-	-	-	0.5	8	18
165 MBK 201	Front 90°	0.5	5	14	-	-	-	0.5	5	14
165 MBK 301		0.5	8	18	-	-	-	0.5	8	18
165 MBK 001	Side	-	-	-	0.5	5	14	-	-	-
165 MBK 101		-	-	-	-	8	18	-	-	-
165 MBK 201	Side 90°	-	-	-	0.5	5	14	-	-	-
165 MBK 301		-	-	-	-	8	18	-	-	-

Actuators	Actuation direction	165MSK00.1F 165MSK00.1L			165MSK00.1C 165MSK00.1I			165MSK00.1D 165MSK00.1J		
		SO_{min}	S_{ao}	S_{ar}	SO_{min}	S_{ao}	S_{ar}	SO_{min}	S_{ao}	S_{ar}
165 MBK 001	Front	-	-	-	0.5	5	14	0.5	5	14
165 MBK 101		-	-	-	0.5	8	18	0.5	8	18
165 MBK 201	Front 90°	-	-	-	0.5	5	14	0.5	5	14
165 MBK 301		-	-	-	0.5	8	18	0.5	8	18
165 MBK 001	Side	0.5	5	14	-	-	-	-	-	-
165 MBK 101		-	8	18	-	-	-	-	-	-
165 MBK 201	Side 90°	0.5	5	14	-	-	-	-	-	-
165 MBK 301		-	8	18	-	-	-	-	-	-

SO_{min} = minimum switching distance (mm), S_{ao} = operating distance (mm), S_{ar} = assured switch-off distance (mm)

elobau GmbH & Co. KG
Zeppelinstr. 44
88299 Leutkirch, Germany

Tel.: +49 (0) 7561 970-0
Fax: +49 (0) 7561 970-100

Article characteristics

Attribute	165MBK101	165MBK201	165MBK301
Coding acc. to EN ISO 14119	Low		
Suitable for sensor type(s)	165MSK		
Dimensions	88x25x13		
Housing material	PBT/PC		
Housing colour	grau/schwarz		
Mounting type	screwed		
Torque for fastening screws	0.7 N m		