elobau GmbH & Co. KG
Zeppelinstr. 44
88299 Leutkirch, Germany

Tel.: +49 (0) 7561 970-0
Fax: +49 (0) 7561 970-100



Tilt sensor N7 dynamic CAN

The N7 dynamic tilt sensor is available in CANopen or SAE J1939 versions. Due to its robust design and high resistance to shock and vibration, it is often used to measure inclination in construction machinery, agricultural machinery, industrial trucks and harsh industrial environments. Enhanced with a highly responsive blend of accelerometer and gyroscope, this combination effectively minimizes the impact of abrupt movements, guaranteeing the delivery of accurate measurement data.

N7 dynamic – developed for even greater safety, reliability, functionality and flexibility.

- High precision, even with fast movements, strong vibrations and shocks
- Inertial Measurement Unit (IMU)
- Output of acceleration, rotation rate and inclination
- Precise signals for dynamic movements thanks to sensor fusion
- EMC standards in accordance with off-highway standards (EN ISO 14982; DIN EN ISO 13766-1; DIN EN 12895)
- Robust design for a long service life: protection class IP6K7 (ISO 20653) / IP6K8 (ISO 20653) / IP6K9K (ISO 20653)
- Temperature-resistant from -40 °C to +85 °C
- Connector types: Deutsch DT04-08PA, 1x M12 5-pin (male) or 2x M12 5-pin (male/female)
- Daisy-Chain – Looping through the CAN signal without additional T-distributors
- Fast installation thanks to efficient 2-point mounting
- Smart variant management thanks to a clever modular system
- E1 type approval for road approval
- Parameter sets customised to the application to increase performance/accuracy (on request)

elobau GmbH & Co. KG
Zeppelinstr. 44
88299 Leutkirch, Germany

Tel.: +49 (0) 7561 970-0
Fax: +49 (0) 7561 970-100

Technical drawing

IMAGE 1/4

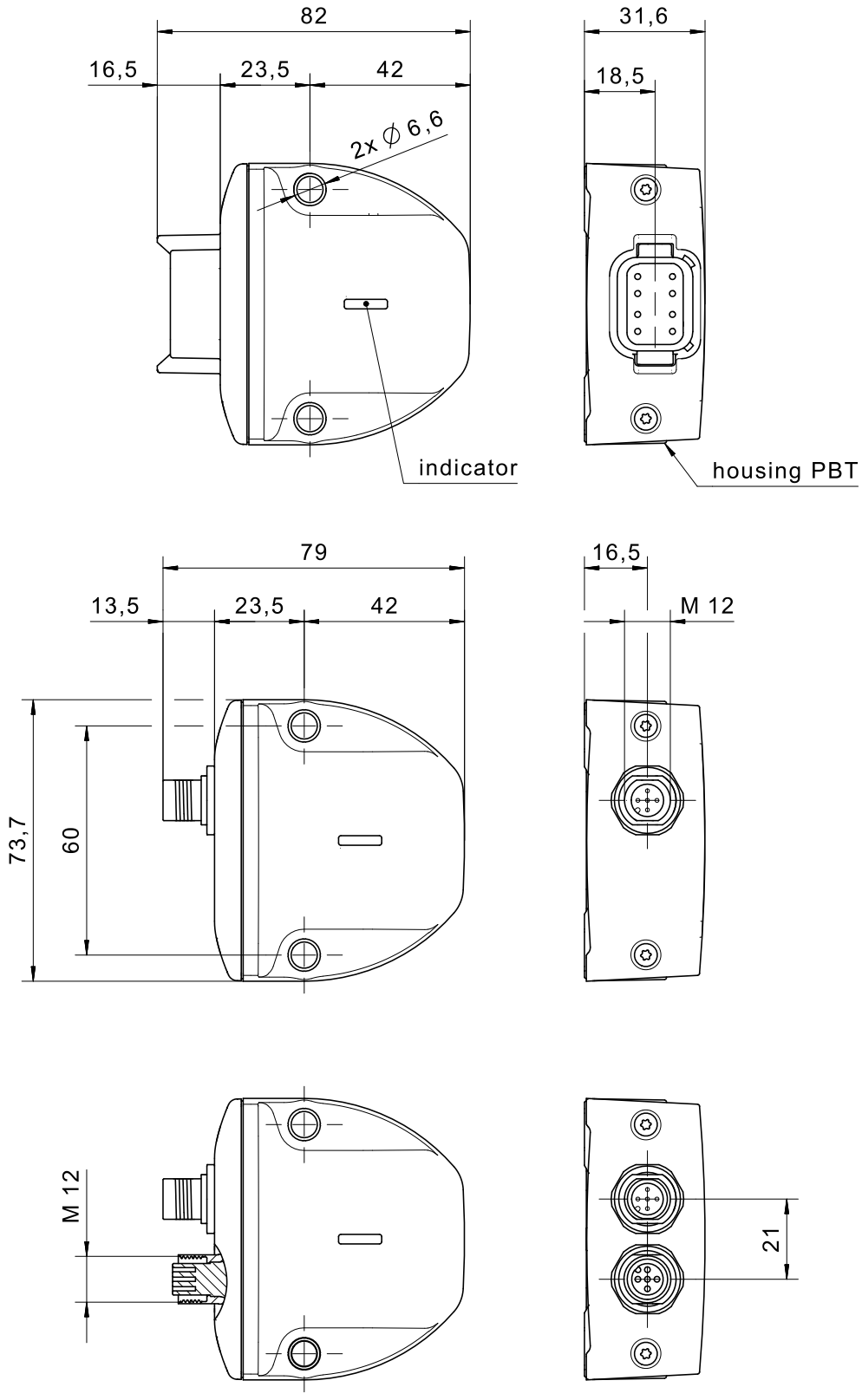

elobau GmbH & Co. KG
Zeppelinstr. 44
88299 Leutkirch, Germany

Tel.: +49 (0) 7561 970-0
Fax: +49 (0) 7561 970-100

IMAGE 2/4

360° (±180°) horizontally mounted

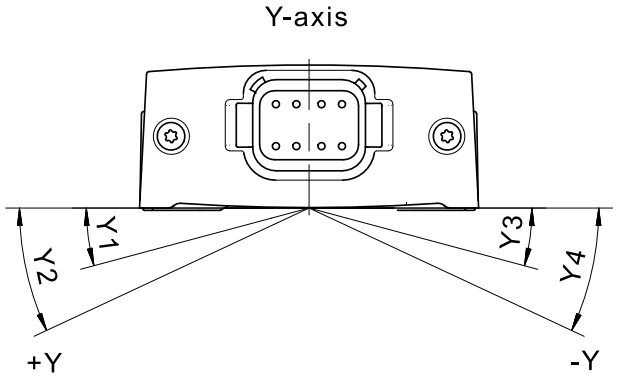

180° (±90°) horizontally mounted

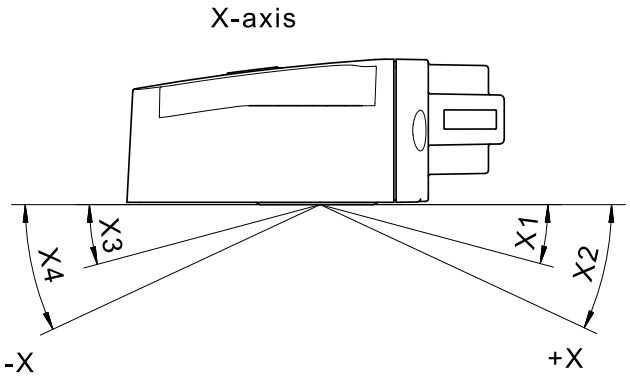

360° (±180°) vertically mounted

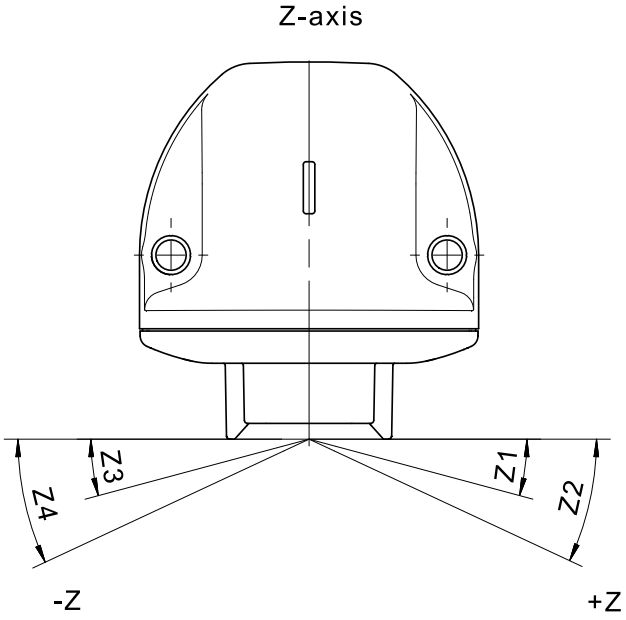

180° (±90°) vertically mounted

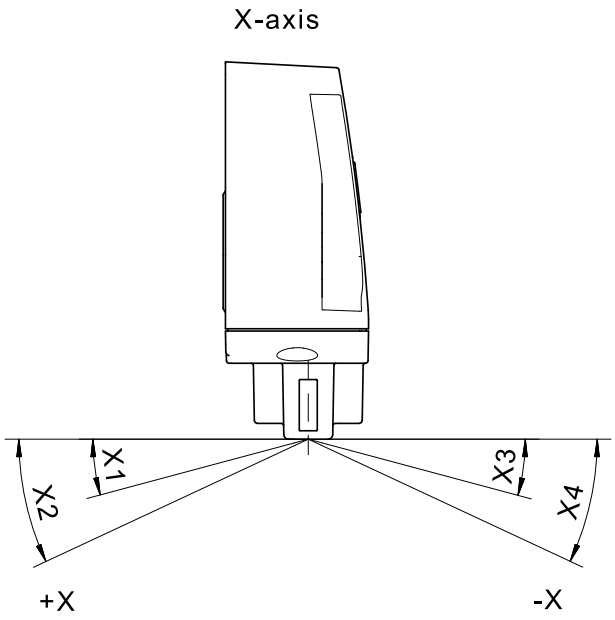

elobau GmbH & Co. KG
Zeppelinstr. 44
88299 Leutkirch, Germany

Tel.: +49 (0) 7561 970-0
Fax: +49 (0) 7561 970-100

IMAGE 3/4

M12 - analog

pin	configuration	specification
1	U_B	operating voltage
2	Out1	output 1
3	GND	ground
4	Out2	output 2
5	n. c.	not connected

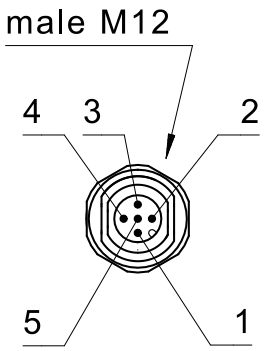

M12 - CAN

pin	configuration	specification
1	n. c.	not connected
2	U_B	operating voltage
3	GND	ground
4	CAN_H	signal line CAN
5	CAN_L	signal line CAN

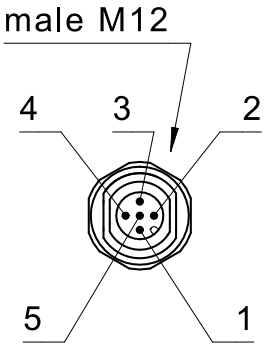

2x M12 - CAN

pin	configuration	specification
1	n. c.	not connected
2	U_B	operating voltage
3	GND	ground
4	CAN_H	signal line CAN
5	CAN_L	signal line CAN

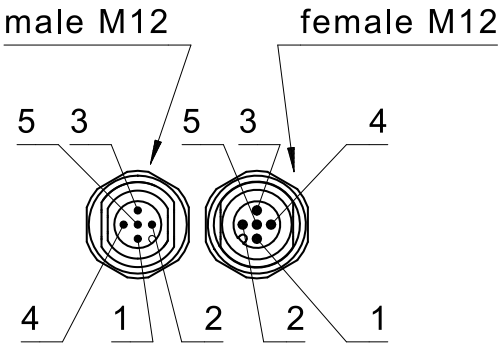

elobau GmbH & Co. KG
Zeppelinstr. 44
88299 Leutkirch, Germany

Tel.: +49 (0) 7561 970-0
Fax: +49 (0) 7561 970-100

IMAGE 4/4

Deutsch DT04-08PA - analog

pin	configuration	specification
1	U_B	operating voltage
2	GND	ground
3	Out1	output 1
4	Out2	output 2
5	Relay1	switch output 1
6	Relay1	switch output 1
7	Relay2	switch output 2
8	Relay2	switch output 2

Deutsch DT04-08PA

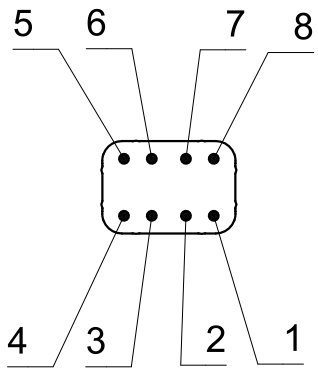

Deutsch DT04-08PA - CAN

pin	configuration	specification
1	U_B	operating voltage
2	GND	ground
3	CAN_L	signal line CAN
4	CAN_H	
5	Relay1	switch output 1
6	Relay1	switch output 1
7	Relay2	switch output 2
8	Relay2	switch output 2

Deutsch DT04-08PA

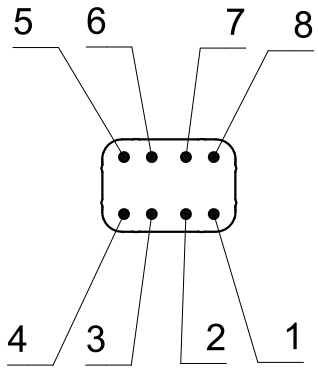

elobau GmbH & Co. KG
Zeppelinstr. 44
88299 Leutkirch, Germany

Tel.: +49 (0) 7561 970-0
Fax: +49 (0) 7561 970-100

Article characteristics

Attribute	N7DCC000H2-001	N7DCC0D2H2-001	N7DCC0D2V2-001	N7DCC000V2-001	N7DCC001H2-001	N7DCC001V2-001
Technology	MEMS					
Supply voltage	+8..+36 V DC					
Polarity reversal protection	-36 V DC					
Short-circuit protection	ISO 16750-2					
Current consumption	100 mA					
Output signal	CANopen	CANopen + 2x relay (NC)		CANopen		
Contact form	-	NC		-		
Protocol	CANopen					
UDS ISO 14229 capability	yes					
Baud rate	250 kBit/s					
Cycle time	10 ms					
Node ID / Source Address	32					
Bus terminating resistor	no					
Connection type (switching output)	-	Relay 1 = X1/X3 Y1/Y3 (Z1/Z3) / Relay 2 = X2/X4 Y2/Y4 (Z2/Z4)		-		
Switching points	-	X1/X3 = 5 X2/X4 = 10 Y1/Y3 = 5 Y2/Y4 = 10 °	X1/X3 = 5 X2/X4 = 10 Z1/Z3 = 5 Z2/Z4 = 10 °	-		
Turn-on delay	-	0s		-		
Turn-off delay	-	0s		-		
Hysteresis	-	±0,1°		-		
Max. switching voltage	-	36 V DC		-		
Max. switching current	-	1 A		-		
Max. switching power	-	30 W		-		
Measuring range acceleration max.	±8 g					
Measuring range gyroscope max.	±250 °/s					
Resolution	0,01 °					
Accuracy dynamically typ.	±0,5 °					
Repeating accuracy	typ. ±0,2 °					
Temperature coefficient	max. ±0,015°/K					
Sensing rate	100 Hz					

elobau GmbH & Co. KG
Zeppelinstr. 44
88299 Leutkirch, Germany

Tel.: +49 (0) 7561 970-0
Fax: +49 (0) 7561 970-100

Attribute	N7DCC000H2-001	N7DCC0D2H2-001	N7DCC0D2V2-001	N7DCC000V2-001	N7DCC001H2-001	N7DCC001V2-001
Initialisation time after power on/start-up time	500 ms					
Installation	horizontal		vertically		horizontal	vertically
Zero justification	±60°					
Number of measurement axes tilt	2					
Measuring principle	dynamic /(fast) moving applications)					
Measuring range	±90° X-Achse ±180° Y-Achse		±90° X-Achse ±180° Z-Achse		±90° X-Achse ±180° Y-Achse	±90° X-Achse ±180° Z-Achse
NMT autostart	not active					
MTTF	92 a					
Connector type	1xM12 5-polig (male)	Deutsch DT04-08PA		1xM12 5-polig (male)	2xM12 5-polig (male/female)	
Weight	113 g	108 g		113 g	123 g	
Housing material	PBT					
Torque for fastening screws	10 Nm					
Storage temperature	-40..+85 °C					
Protection class	IP6K7, IP6K9K ISO 20653	IP6K7,IP6K8, IP6K9K ISO 20653		IP6K7, IP6K9K ISO 20653		
Vibration resistance (Norm)	EN 60068-2-64 (random vibration 7,99g , 5-500Hz, 20,1mm displacement)					
Shock resistance (Norm)	EN 60068-2-27 (shock 51g, 11ms)					
Operating temperature	-40..+85 °C					
Salt spray test	DIN EN 60068-2-11 (salt spray mist for 96h at 35°C)					
EMC Agricultural and forestry machines (Norm)	EN ISO 14982, Load dump Pulse B with Us = 85V, Cranking ISO 16750-2 Level 1-4					
EMC Earth-moving and building construction machinery (Norm)	DIN EN ISO 13766-1, Load dump Pulse B with Us = 85V, Cranking ISO 16750-2 Level 1-4					
EMC Industrial trucks (Norm)	DIN EN 12895					
CE	yes					
E1 type approval	UN ECE Regulation No. 10 No. 10R06/01 9376 00					

elobau GmbH & Co. KG
Zeppelinstr. 44
88299 Leutkirch, Germany

Tel.: +49 (0) 7561 970-0
Fax: +49 (0) 7561 970-100

Attribute	N7DCC002H2-001	N7DCC002V2-001	N7DCJ0D2H2-001	N7DCJ0D2V2-001	N7DCJ000H2-001	N7DCJ000V2-001
Technology	MEMS					
Supply voltage	+8..+36 V DC					
Polarity reversal protection	-36 V DC					
Short-circuit protection	ISO 16750-2					
Current consumption	100 mA					
Output signal	CANopen		J1939 + 2x relay (NC)		J1939	
Contact form	-		NC		-	
Protocol	CANopen		J1939			
UDS ISO 14229 capability	yes					
Baud rate	250 kBit/s					
Cycle time	10 ms					
Node ID / Source Address	32		226			
Bus terminating resistor	no					
Connection type (switching output)	-		Relay 1 = X1/X3 Y1/Y3 (Z1/Z3) / Relay 2 = X2/X4 Y2/Y4 (Z2/Z4)		-	
Switching points	-		X1/X3 = 5 X2/X4 = 10 Y1/Y3 = 5 Y2/Y4 = 10 °	X1/X3 = 5 X2/X4 = 10 Z1/Z3 = 5 Z2/Z4 = 10 °	-	
Turn-on delay	-		0s		-	
Turn-off delay	-		0s		-	
Hysteresis	-		±0,1°		-	
Max. switching voltage	-		36 V DC		-	
Max. switching current	-		1 A		-	
Max. switching power	-		30 W		-	
Measuring range acceleration max.	±8 g					
Measuring range gyroscope max.	±250 °/s					
Resolution	0,01 °					
Accuracy dynamically typ.	±0,5 °					
Repeating accuracy	typ. ±0,2 °					
Temperature coefficient	max. ±0,015°/K					
Sensing rate	100 Hz					
Initialisation time after power on/start-up time	500 ms					

elobau GmbH & Co. KG
Zeppelinstr. 44
88299 Leutkirch, Germany

Tel.: +49 (0) 7561 970-0
Fax: +49 (0) 7561 970-100

Attribute	N7DCC002H2-001	N7DCC002V2-001	N7DCJ0D2H2-001	N7DCJ0D2V2-001	N7DCJ000H2-001	N7DCJ000V2-001
Installation	horizontal	vertically	horizontal	vertically	horizontal	vertically
Zero justification	±60°					
Number of measurement axes tilt	2					
Measuring principle	dynamic /(fast) moving applications)					
Measuring range	±90° X-Achse ±180° Y-Achse	±90° X-Achse ±180° Z-Achse	±90° X-Achse ±180° Y-Achse	±90° X-Achse ±180° Z-Achse	±90° X-Achse ±180° Y-Achse	±90° X-Achse ±180° Z-Achse
NMT autostart	not active					
MTTF	92 a					
Connector type	Deutsch DT04-08PA				1xM12 5-polig (male)	
Weight	108 g				113 g	
Housing material	PBT					
Torque for fastening screws	10 Nm					
Storage temperature	-40..+85 °C					
Protection class	IP6K7,IP6K8, IP6K9K ISO 20653				IP6K7, IP6K9K ISO 20653	
Vibration resistance (Norm)	EN 60068-2-64 (random vibration 7,99g , 5-500Hz, 20,1mm displacement)					
Shock resistance (Norm)	EN 60068-2-27 (shock 51g, 11ms)					
Operating temperature	-40..+85 °C					
Salt spray test	DIN EN 60068-2-11 (salt spray mist for 96h at 35°C)					
EMC Agricultural and forestry machines (Norm)	EN ISO 14982, Load dump Pulse B with Us = 85V, Cranking ISO 16750-2 Level 1-4					
EMC Earth-moving and building construction machinery (Norm)	DIN EN ISO 13766-1, Load dump Pulse B with Us = 85V, Cranking ISO 16750-2 Level 1-4					
EMC Industrial trucks (Norm)	DIN EN 12895					
CE	yes					
E1 type approval	UN ECE Regulation No. 10 No. 10R06/01 9376 00					

elobau GmbH & Co. KG
Zeppelinstr. 44
88299 Leutkirch, Germany

Tel.: +49 (0) 7561 970-0
Fax: +49 (0) 7561 970-100

Attribute	N7DCJ001H2-001	N7DCJ001V2-001	N7DCJ002H2-001	N7DCJ002V2-001
Technology	MEMS			
Supply voltage	+8..+36 V DC			
Polarity reversal protection	-36 V DC			
Short-circuit protection	ISO 16750-2			
Current consumption	100 mA			
Output signal	J1939			
Contact form	-			
Protocol	J1939			
UDS ISO 14229 capability	yes			
Baud rate	250 kBit/s			
Cycle time	10 ms			
Node ID / Source Address	226			
Bus terminating resistor	no			
Connection type (switching output)	-			
Switching points	-			
Turn-on delay	-			
Turn-off delay	-			
Hysteresis	-			
Max. switching voltage	-			
Max. switching current	-			
Max. switching power	-			
Measuring range acceleration max.	±8 g			
Measuring range gyroscope max.	±250 °/s			
Resolution	0,01 °			
Accuracy dynamically typ.	±0,5 °			
Repeating accuracy	typ. ±0,2 °			
Temperature coefficient	max. ±0,015°/K			
Sensing rate	100 Hz			
Initialisation time after power on/start-up time	500 ms			
Installation	horizontal	vertically	horizontal	vertically
Zero justification	±60°			
Number of measurement axes tilt	2			

elobau GmbH & Co. KG
Zeppelinstr. 44
88299 Leutkirch, Germany

Tel.: +49 (0) 7561 970-0
Fax: +49 (0) 7561 970-100

Attribute	N7DCJ001H2-001	N7DCJ001V2-001	N7DCJ002H2-001	N7DCJ002V2-001
Measuring principle	dynamic /(fast) moving applications)			
Measuring range	±90° X-Achse ±180° Y-Achse	±90° X-Achse ±180° Z-Achse	±90° X-Achse ±180° Y-Achse	±90° X-Achse ±180° Z-Achse
NMT autostart	not active			
MTTF	92 a			
Connector type	2xM12 5-polig (male/female)		Deutsch DT04-08PA	
Weight	123 g		108 g	
Housing material	PBT			
Torque for fastening screws	10 Nm			
Storage temperature	-40..+85 °C			
Protection class	IP6K7, IP6K9K ISO 20653		IP6K7,IP6K8, IP6K9K ISO 20653	
Vibration resistance (Norm)	EN 60068-2-64 (random vibration 7,99g , 5-500Hz, 20,1mm displacement)			
Shock resistance (Norm)	EN 60068-2-27 (shock 51g, 11ms)			
Operating temperature	-40..+85 °C			
Salt spray test	DIN EN 60068-2-11 (salt spray mist for 96h at 35°C)			
EMC Agricultural and forestry machines (Norm)	EN ISO 14982, Load dump Pulse B with Us = 85V, Cranking ISO 16750-2 Level 1-4			
EMC Earth-moving and building construction machinery (Norm)	DIN EN ISO 13766-1, Load dump Pulse B with Us = 85V, Cranking ISO 16750-2 Level 1-4			
EMC Industrial trucks (Norm)	DIN EN 12895			
CE	yes			
E1 type approval	UN ECE Regulation No. 10 No. 10R06/01 9376 00			